THE FEDERAL DEMOCRATIC REPUBLIC OF

ETHIOPIA

ETHIOPIAN ROADS AUTHORITY

BEST PRACTICE MANUAL FOR THIN BITUMINOUS SURFACINGS

2013

FOREWORD

The Ethiopian Road Authority (ERA) is implementing various measures to improve capacity in the road construction industry to construct thin bituminous surfacings for rural roads. These initiatives include the development of a training programme on the design and construction of thin bituminous surfacings, and this Best Practice Manual. Training courses for engineers, technicians, foremen and operators have been carried out at the Alemgena Training and Testing Centre (ATTC). The purpose of these endeavours is to assist the road construction and maintenance industry in Ethiopia to provide more cost-effective and durable bituminous surfaced roads.

In recent years there has been a reduction in the use of thin bituminous surfacings in Ethiopia in favour of asphalt concrete. We had experienced a number of surfacing failures and thin bituminous surfacings had started to develop a poor reputation. When we analysed the reasons for this we discovered that there had been cases of inappropriate treatment selection, poor workmanship on site, and an inadequate general understanding of seal design. The existing technical specifications were insufficient and unclear.

The use of asphalt concrete surfacing instead of thin seals has led to increased cost of construction for our rural roads. This trend needs to be reversed in order for us to maximise the use of the resources we have available in the road sector in order to bring the maximum benefits to the rural population.

As a result we have begun implementing a skills enhancement training programme for local surface treatment practitioners. We have also produced this manual, which provides state-of-the-art guidance on the interpretation of standards, surface treatment selection, the design of thin seals, and their construction and maintenance in Ethiopia.

I trust that this manual will provide the essential information needed to guide our design engineers and our construction industry in the provision of appropriate and sustainable paved rural roads.

Zaid Wolde Gebriel

Director General of the Ethiopian Roads Authority

PREFACE

The Ethiopian Roads Authority is the custodian of the series of technical manuals, standard specifications and bidding documents that are written for the practicing engineer in Ethiopia. The series describes current and recommended practice and sets out the national standards for roads and bridges. The standards are based on national experience and international practice and are approved by the Director General of the Ethiopian Roads Authority.

This Best Practice Manual for Thin Bituminous Surfacings forms part of the Ethiopian Roads Authority series of Road and Bridge Design documents. Companion documents and manuals include the Standard Technical Specifications, Standard Detailed Drawings and Standard Bidding Documents. The complete series of documents, covering all roads and bridges in Ethiopia, are contained within the series:

- Route Selection Manual
- Site Investigation Manual
- Geometric Design Manual
- Geotechnical Design Manual
- Drainage Design Manual
- Pavement Design Manual Volume I (Flexible and Unpaved Pavements)
- Pavement Design Manual Volume II (Rigid Pavements)
- Rehabilitation and Overlay Design Manual
- Bridge Design Manual
- Low Volume Roads Design Manual (Part A to G)
- Standard Environmental Procedures Manual
- Standard Technical Specifications
- Standard Detailed Drawings
- Standard Bidding Documents for Road Work Contracts (Local Competitive Bidding and International Competitive Bidding)

These documents are available to registered users through the ERA website: www.era.gov.et

In particular this manual should be read in conjunction with the Pavement Design Manual Volume I (Flexible and Unpaved Pavements), which includes detailed guidance on the design of thin bituminous surfacings and materials specifications.

Zaid Wolde Gebriel

Director General of the Ethiopian Roads Authority

MANUAL UPDATES

Significant changes to criteria, procedures or any other relevant issues related to new policies or revised laws of the land or that are mandated by the relevant Federal Government Ministry or Agency should be incorporated into the manual from their date of effectiveness. Other minor changes that will not significantly affect the whole nature of the manual may be accumulated and made periodically. When changes are made and approved, new page(s) incorporating the revision, together with the revision date, will be issued and inserted into the relevant chapter.

All suggestions to improve this manual should be made in accordance with the following procedure:

- Users of the manual must register on the ERA web site: www.era.gov.et
- Proposed changes should be outlined on the Manual Change Form and forwarded with a covering letter of its need and purpose to the Director General of the Ethiopian Roads Authority.
- Agreed changes will be approved by the Director General of the Ethiopian Roads Authority on recommendation from the Deputy Director General (Engineering Operations).
- All changes to the manual will be made prior to release of a new version of the manual.
- The release date of the new version will be notified to all registered users and authorities.

ETHIOPIAN ROADS AUTHORITY
CHANGE CONTROL DESIGN MANUAL

MANUAL CHANGE	This area to be completed by the ERA Director of Quality Assurance
Manual Title _____	CHANGE NO. _____
_____	(SECTION NO. CHANGE NO _____

Section Table Figure Page	Explanation	Suggested Modification

Submitted by: _____ Name/Designation: _____

Company/Organisation Address _____

_____ email: _____ Date: _____

Manual Change Action

Authority	Date	Signature	Recommended Action	Approval
Registration				
Director Quality Assurance				
Directors Region				
Deputy Director General Eng.Ops				

Approval / Provisional Approval / Rejection of Change:

Director General ERA _____ Date: _____

ACKNOWLEDGEMENTS

The Ethiopian Roads Authority (ERA) wishes to thank the UK Government's Department for International Development (DFID) through the Africa Community Access Programme (AFCAP) for their support in developing this *Best Practice Manual for Thin Bituminous Surfacings*. In particular ERA would like to thank Roughton International, who were the authors of the manual, and Eng. Gerrie van Zyl from South Africa who conducted an expert peer review. The process was overseen by Eng. Alemayehu Ayele, the ERA Director of Research and Development, and Eng. Robert Geddes, the Crown Agents Technical Services Manager for AFCAP.

This *Best Practice Manual for Thin Bituminous Surfacings* is based on a review of best practice in several countries including South Africa and Australia where this bituminous surfacings are used on the majority of the rural road network. It emerged from training courses in the use of thin bituminous surfacings carried out by Roughton International and the Alemgena Training and Testing Centre (ATTC) in November 2011 and February 2012.

Zaid Wolde Gebriel

Director General of the Ethiopian Roads Authority

TABLE OF CONTENTS

Page

FOREWORD I

PREFACE II

MANUAL UPDATES III

ACKNOWLEDGEMENTS V

TABLE OF CONTENTS VI

LIST OF FIGURES VIII

LIST OF TABLES X

ABBREVIATIONS XI

ACCOMPANYING DOCUMENTS XII

1 INTRODUCTION 1

1.1 Background 1
1.2 Purpose of this Manual 1
1.3 Use of Thin Surfacings 1
1.4 Ethiopian Environment 1
1.5 Road Network 1
1.6 Traffic 2
1.7 Types of Thin Bituminous Surfacings 3

2 SELECTION OF APPROPRIATE SURFACING 9

2.1 Required Information 9
2.2 Surfacings on Newly Constructed Roads 13
2.3 Maintenance Surfacing 16

3 FIELD INVESTIGATIONS 19

3.1 Overview 19
3.2 Traffic Survey Data 19
3.3 Assessment of Existing Road Condition 21
3.4 Road Surface Hardness 21
3.5 Depot Tray Test 22
3.6 Bakkie Test 25

4 DESIGN OF BITUMINOUS SURFACINGS 27

4.1 Specifications 27
4.2 Surface Dressings 27
4.3 Otta Seals 39
4.4 Slurry Seals 42
4.5 Cape Seals 43
4.6 Sand Seals 44

5 PRICING 45

5.1 Overview 45
5.2 Pricing of Thin Bituminous Surfacings in Ethiopia 45
5.3 Pricing Database 46
5.4 Life Cycle Costing 46

6 CONSTRUCTION OF THIN BITUMINOUS SURFACINGS 49

6.1 Scope 49
6.2 Base Preparation 49
6.3 Materials 49
6.4 Equipment 51
6.5 Surface Dressing 64
6.6 Otta Seals 67
6.7 Labour Based Methods of Otta Seal Construction 68
6.8 Sand Seals 70
6.9 Slurry Seals 70
6.10 Cape Seals 73
6.11 Cold Mix Asphalt 74
6.12 Fog Sprays 81
6.13 Safety 82

7 QUALITY CONTROL 85

7.1 Construction Practices 85
7.2 Material Specifications 86

8 MAINTENACE 89

8.1 Definitions 89
8.2 General Repairs 89
8.3 Structural Defects and Repair 89
8.4 Surface Defects and Repair 95
8.5 Cracks 97

APPENDIX A TYPES OF EQUIPMENT 103

APPENDIX B LABORATORY TESTS 109

LIST OF FIGURES

Figure 1: Road map of Ethiopia....2
Figure 2: Types of bituminous surfacing....4
Figure 3: Single surface dressing....4
Figure 4: Double surface dressing....5
Figure 5: Racked-in surface dressing....6
Figure 6: Sandwich surface dressing....6
Figure 7: Pad coats....7
Figure 8: Otta seal....7
Figure 9: Cape seal....8
Figure 10: Sand seal....8
Figure 11: MEXE Cone Penetrometer....22
Figure 12: Average deviation from mean spray depth....24
Figure 13: Depot Tray test in Nepal....24
Figure 14: The depot spray test after spraying has finished....25
Figure 15: Measuring the bitumen in each tray....25
Figure 16: Minimum PSV for chippings....31
Figure 17: Determination of average least dimension....34
Figure 18: Preferred choice of binder for road surface temperatures....36
Figure 19: Surface Dressing Design Chart....38
Figure 20: Bitumen distributor....54
Figure 21: A bitumen distributor using swirling nozzles....56
Figure 22: Correct alignment of spray nozzles....56
Figure 23: Spray bar height adjustment – double overlap....57
Figure 24: Spray bar height adjustment – triple overlap....57
Figure 25: Spray and chippings overlap – double overlap....58
Figure 26: Spray and chippings overlap – triple overlap....58
Figure 27: Poor flair....59
Figure 28: A tail-board chipping spreader....61
Figure 29: Self-propelled chipping spreader....62
Figure 30: Steel wheeled roller....63
Figure 31: A PTR....63
Figure 32: Towed bitumen heater-distributor....64
Figure 33: Application of a prime coat....65
Figure 34: Application of chippings immediately after the application of binder....67
Figure 35: Rolling an Otta seal....68
Figure 36: Typical appearance of a single Otta seal after four years in service....68
Figure 37: Spreading of aggregates by hand....69
Figure 38: Spreading aggregates with a Chippie....69
Figure 39: Construction of a sand seal....70
Figure 40: Mixing the slurry....72
Figure 41: Transporting the slurry to the location of application....72
Figure 42: Spreading the slurry using squeegees....73
Figure 43: Aggregate grading for cold mix asphalt....75
Figure 44: Spreading emulsion....76
Figure 45: Mixing tray....77
Figure 46: Mixing tray dimensions....77
Figure 47: Mixing cold mix asphalt....78

Figure 48: Placing the cold mix asphalt by spade 78
Figure 49: Levelling the cold mix asphalt 79
Figure 50: Constructing the adjacent strip of asphalt 80
Figure 51: Adjacent strips of asphalt 80
Figure 52: A poorly constructed joint 81
Figure 53: A well constructed joint 81
Figure 54: Fog spray applied to a single surface dressing 82
Figure 55: High visibility jackets 83
Figure 56: Traffic cones used as a control measure 84
Figure 57: Defective patching 90
Figure 58: A recently excavated distressed area requiring cleaning, priming and patching 91
Figure 59: Rutting 91
Figure 60: Potholes 91
Figure 61: Edge break 92
Figure 62: Failed section of road 92
Figure 63: Poor drainage 93
Figure 64: Failed patch and poor drainage 93
Figure 65: Longitudinal cracking 97
Figure 66: Transverse cracking 98
Figure 67: Crocodile cracking 98
Figure 68: Block cracking 98
Figure 69: Crack sealing 99
Figure 70: Crack monitoring 99
Figure 71: Needle for the penetration test 110
Figure 73 Brass mould for the ductility test 112
Figure 73: Ring and ball assembly 113
Figure 74: Shouldered ring, softening point test 114
Figure 75: Ring holder, softening point test 114
Figure 76: Ball centering guide, softening point test 115
Figure 77: Saybolt viscometer with universal and Furol orifice 116
Figure 78: Withdrawal tube for use with the Saybolt Viscometer 117
Figure 79: Thermometer support 118
Figure 80: Filter funnel for use with Saybolt Viscometer 119
Figure 81: Receiving flask 120
Figure 82: Tag Open-Cup Flash Tester 122
Figure 83: Thickness gauge 123
Figure 84: Outline form of cylinder and plunger apparatus for the ACV 125
Figure 85: Aggregate impact test machine 128
Figure 86: Ethylene glycol test, aggregate n° 1 130
Figure 87: Ethylene glycol test, aggregate n° 2 131

LIST OF TABLES

Table 1: Increasing AADT across Ethiopia from 1998 to 2010 3
Table 2: Information required for initial selection and design of a bituminous surfacing and necessary pre-treatment 10
Table 3: Guideline to surfacing types appropriate for specific traffic levels 13
Table 4: Surfacing types appropriate for traffic and road type combinations ... 14
Table 5: Surfacing types appropriate for different road gradient categories 14
Table 6: Surfacing types appropriate for different maintenance capabilities 15
Table 7: Specified sizes for given nominal sizes 29
Table 8: Grading limits, specified size and maximum flakiness index for surface dressing aggregates 30
Table 9: Grading limits, specified size and maximum flakiness index for surface dressing aggregates for lightly trafficked roads 30
Table 10: Recommended nominal size of chippings (mm) 32
Table 11: Categories of road surface hardness 32
Table 12: Weighting factors for surface dressing design 37
Table 13: Typical bitumen spray rate adjustment factors 39
Table 14: Suggested maximum increases in bitumen spray rate for LVRs 39
Table 15: Otta seal aggregate grading requirements 40
Table 16: Otta seal aggregate strength requirements 40
Table 17: Recommended type of Otta seal in relation to traffic levels 40
Table 18: Preferred aggregate grading for Otta seals 40
Table 19: Alternative grading envelopes 41
Table 20: Choice of bitumen in relation to traffic and grading 41
Table 21: Making cut back bitumen on site 41
Table 22: Hot bitumen spray rates for un-primed base course (l/m^2) 42
Table 23: Aggregate application rates 42
Table 24: Aggregate particle size distribution for slurry seals 43
Table 25: Gradings for sand used in a sand seal 44
Table 26: Storage temperatures for bitumen 49
Table 27: Specification for penetration grade bitumen 50
Table 28: Specification for MC 3000 50
Table 29: Equipment options for thin bituminous surfacings 52
Table 30: Binder spraying temperature 59
Table 31: Consistency values of flow 70
Table 32: Grading requirements 74
Table 33: Coarse Aggregate Specification 75
Table 34: Cold mix asphalt proportions 76
Table 35: Sample container dimensions, taken from AASHTO T 49 110
Table 36: ASTM Saybolt Viscosity Thermometers 120
Table 37: Particulars of Sieves 123
Table 38: Data for determination of flakiness index 123
Table 39: Principal dimensions of cylinder and plunger apparatus for ACV ... 125
Table 40: Minimum mass of test portions required to obtain a suitable mass of material to determine the ACV 126
Table 41: Guide to minimum mass of test portions required to obtain a suitable mass of material to determine AIV 129

ABBREVIATIONS

AADT	Average Annual Daily Traffic
ACV	Aggregate Crushing Value
AFCAP	Africa Community Access Programme
AIV	Aggregate Impact Value
ALD	Average Least Dimension
ATTC	Alemgena Training and Testing Centre
BoQ	Bill of Quantities
CAM	Crack Activity Meter
CBR	California bearing Ration
CSIR	Council for Scientific and Industrial Research
ERA	Ethiopian Road Authority
ETB	Ethiopian Birr
ITE	Intermediate Technology Equipment
LAA	Los Angeles Abrasion
NPRA	Norwegian Public Roads Administration
ORN	Overseas Road Note
PI	Plasticity Index
PPE	Personal Protective Equipment
PSV	Polished Stone Value
PTR	Pneumatic Tyre Roller
Sabita	Southern African Bitumen Association
TMH	Technical Methods for Highways
TRL	Transport Research Laboratory
TRH	Technical Recommendations for Highways

ACCOMPANYING DOCUMENTS

Documents referred to in this Manual include:

Overseas Road Note (ORN) 3 a Guide to Surface Dressing in Tropical and Sub-tropical Countries. TRL.

ERA Specification 2002 Series 6000 Bituminous Surfacings and Roadbases.

TRH 3 Design and Construction of Surfacing Seals.

TRH 6 Nomenclature and Methods for Describing the Condition of Asphalt Pavements.

TMH 9 Pavement Management Systems: Standard Visual Assessment Manual for Flexible Pavements.

Sabita Manual 10 Bituminous Surfacings for Low Volume Roads and Temporary Deviations.

Norwegian Public Roads Administration Publication no. 93, Guide to the Use of Otta seals.

1 INTRODUCTION

1.1 Background

Thin bituminous surfacings are used throughout the world for surfacing newly built roads with light to medium traffic. They are also used as a maintenance treatment for roads with heavy traffic. Thin bituminous surfacings waterproof the road surface and prevent the ingress of moisture by sealing hairline cracks. Thin bituminous surfacings also provide a durable, skid-resistant and dust-free wearing surface for the road.

The most common form of thin bituminous surfacing is a surface dressing, consisting of a thin film of bitumen applied to the surface followed by a layer of stone chippings. An additional layer of bitumen and chippings can be applied to form a double surface dressing, giving vastly improved durability and protection to the lower pavement layers.

1.2 Purpose of this Manual

The purpose of this manual is to support the use of thin bituminous surfacings in Ethiopia. The manual aims to improve design practice, workmanship during construction, and quality control.

This manual draws on sources and experience from around the world as well as from within Ethiopia, in order to tailor international practice to the customs and conditions of Ethiopia.

1.3 Use of Thin Surfacings

Thin bituminous surfacings are a declining practice in Ethiopia in favour of the use of asphalt concrete. Whilst asphalt concrete surfacing is often required for roads carrying heavy traffic loads travelling at high speeds, it is not necessary for roads carrying lighter traffic loads, particularly in rural areas.

Although asphalt concrete surfacings increase the strength of a pavement they are generally thicker than thin bituminous surfacings and thus use more material, increasing construction costs. Asphalt concrete has been used on roads where a thin bituminous surfacings would have been adequate and more appropriate. The additional cost of asphalt concrete reduces the length of road works that can be constructed across the country within the available resource envelope.

1.4 Ethiopian Environment

In the highlands that cover most of Ethiopia the climate is temperate. The temperature can range from 4 °C to 26 °C, with an average temperature of 15 °C to 25 °C. The weather is usually warm and dry, with the exception of the short rains occurring from February to April and the heavy rains from June to September. In contrast, the Somali region and Danakil lowlands in the Afar region have a hot, dry climate, producing semi desert conditions. In the deep valleys of the Tekezé and Abay, conditions are tropical. The climate across Ethiopia varies greatly with elevation.

1.5 Road Network

70% to 75% of the land area in Ethiopia is more than 5 km away from an all-weather road. The first part of a ten year Road Sector Development Plan, carried out by the Ethiopian

government from 1997 to 2002 resulted in considerable improvements to Ethiopia's network of federal and regional roads, both paved and unpaved. The second part of the programme, completed in 2007, involved the upgrading or construction of over 7,500 km of road, with the aim of improving access to all weather roads. By 2009, 89% of federally managed roads were in good condition. Ethiopia has a total of 101,359 km of federal and regional roads, of asphaltic or gravel construction. The major roads in Ethiopia are shown in Figure 1.

Figure 1: Road map of Ethiopia

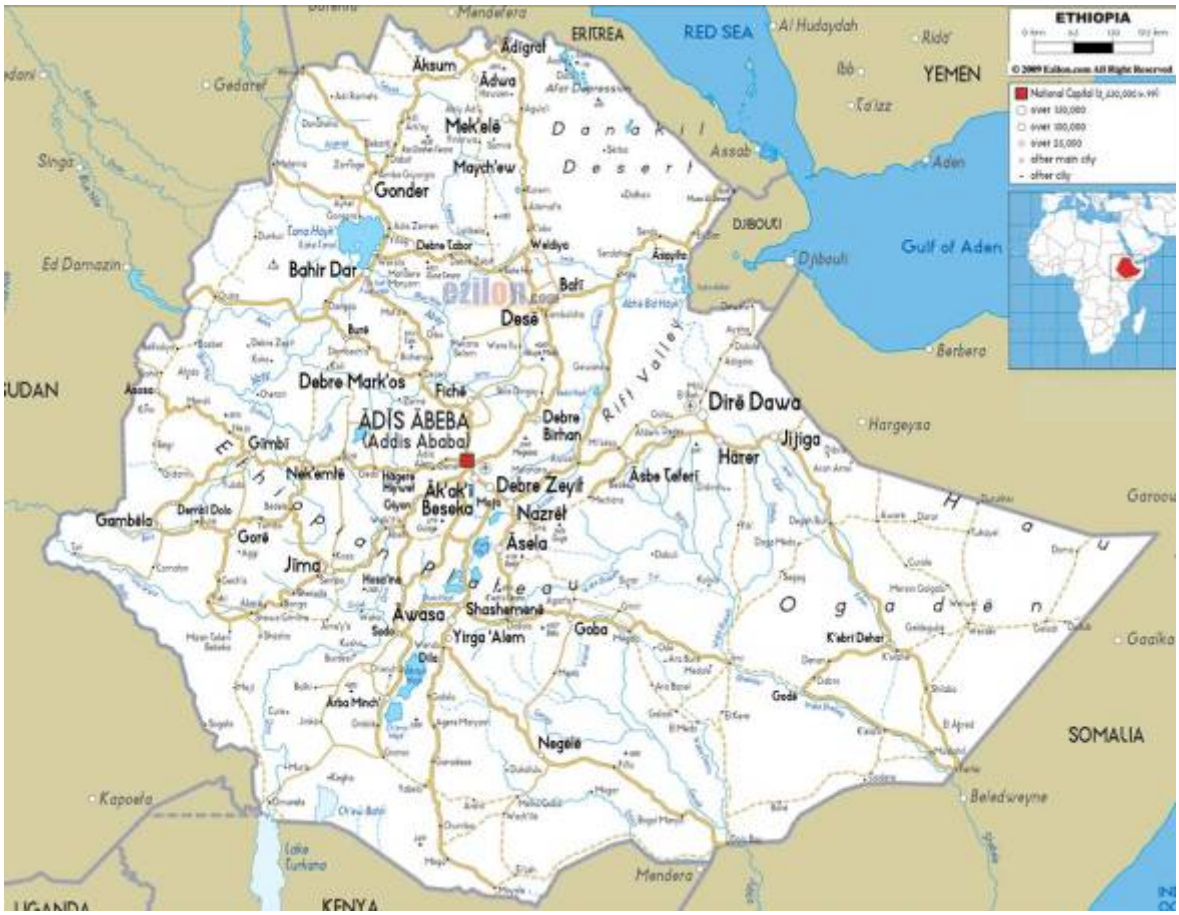

1.6 Traffic

Traffic levels across Ethiopia vary considerably from region to region. In a 2010 traffic survey carried out by the Ethiopian Road Authority (ERA) on a 14,272 km sample of federal roads, AADT (Annual Average Daily Traffic) counts were taken for cars, small buses, large buses, land rovers, light trucks, medium trucks, heavy trucks and trailer trucks. Across all districts, heavier vehicles tended to account for a large proportion of the total traffic, with buses and trucks being the most common type of vehicle.

Table 1 shows the total AADT across all the districts covered in the 2010 traffic survey, as well as the figures for the previous 12 years. This table does not indicate AADT values for specific districts or roads in Ethiopia, but illustrates the general increase of traffic across the country in recent years.

Table 1: Increasing AADT across Ethiopia from 1998 to 2010[1]

Year	AADT for each type of vehicle across all districts				
	Car	Bus	Truck	Truck and Trailer	Total
1998	13,680	12,291	20,198	4,909	51,078
1999	12,996	14,210	22,582	6,135	55,923
2000	13,403	13,205	22,585	6,479	55,672
2001	17,910	16,318	29,923	8,316	72,467
2002	18,299	17,955	31,049	11,383	78,686
2003	19,653	19,126	34,574	9,650	83,003
2004	21,488	22,760	38,280	10,178	92,706
2005	22,823	25,339	43,268	13,228	104,658
2006	25,862	31,050	48,411	13,734	119,057
2007	31,219	37,091	56,164	17,788	142,262
2008	33,231	42,345	60,464	18,321	154,361
2009	38,145	48,492	73,896	22,286	182,819
2010	39,782	53,986	79,885	22,886	196,539

1.7 Types of Thin Bituminous Surfacings

1.7.1 Definitions

It is important to note that thin bituminous surfacings such as surface dressings are given different names in different countries. A description of each type of surfacing and its English name are given in this section.

Single and double surface dressings are the most common type of thin bituminous surfacing used for sealing road pavements. A single surface dressing consists of a layer of bitumen protected by a layer of single sized aggregate. An additional layer of bitumen can be applied with a further layer of smaller aggregate to form a double surface dressing. Other types of thin bituminous surfacing include Otta seals, sand seals, slurry seals and Cape seals. Different types of thin bituminous surfacing are illustrated in Figure 3 to Figure 10. Thin bituminous surfacings are shown within the context of all types of surfacings in Figure 2.

[1] ERA, Annual Traffic Count Report on the Federal Road Network in Ethiopia, 2011.

Figure 2: Types of bituminous surfacing

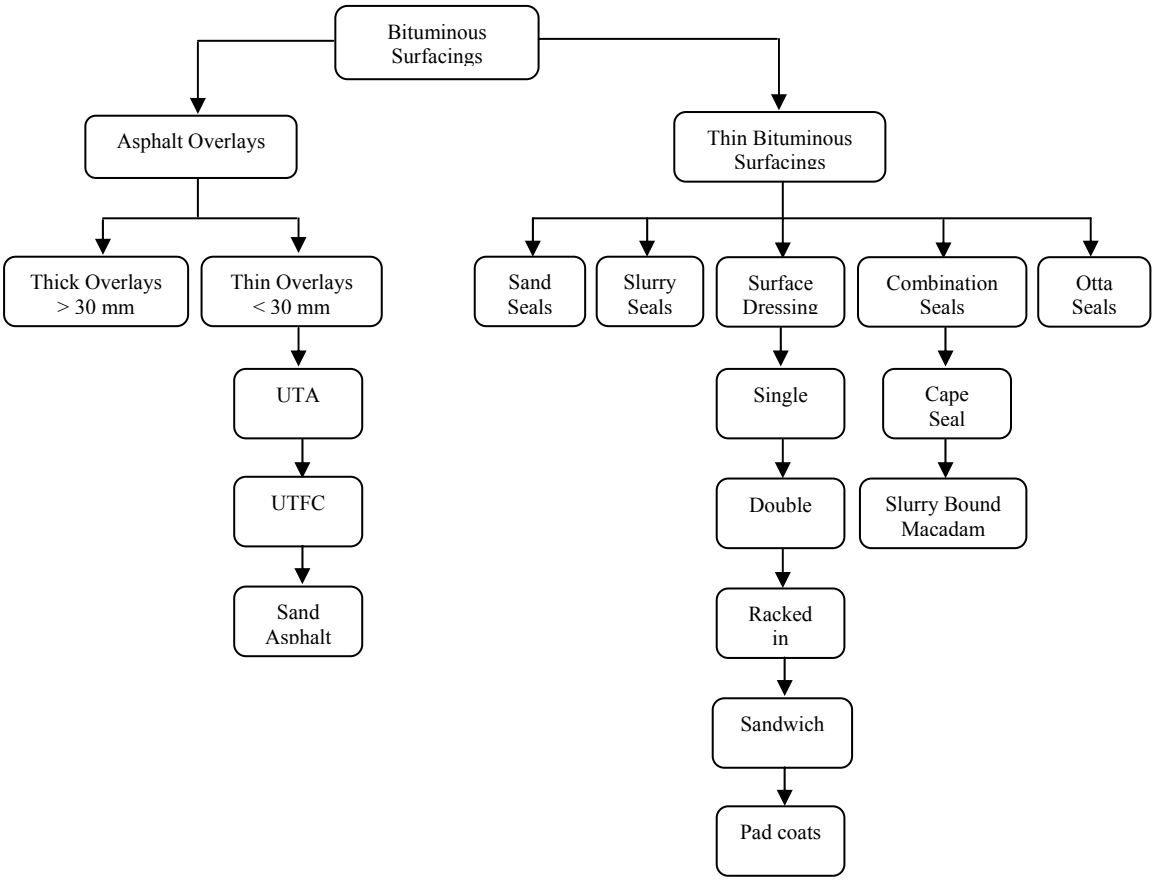

1.7.2 Single Surface Dressings

In the construction of a single surface dressing a thin layer of bitumen is sprayed onto the road surface and a layer of single sized chippings is then spread onto the bitumen. Normally the chippings should be applied immediately after the bitumen is sprayed.

This type of thin bituminous surfacing should be used in maintenance operations on an existing road because it does not provide the durability required for surfacing newly constructed road bases.

Figure 3: Single surface dressing[2]

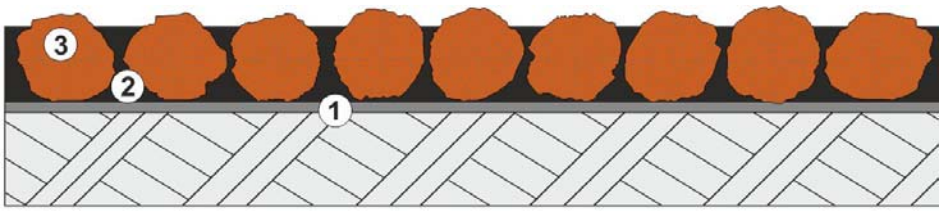

1 Prime coat
2 Binders
3 Aggregate

[2] *South African National Roads Agency.. TRH 3, Surfacing Seals for Rural and Urban Roads, 2007.*

1.7.3 Double Surface Dressings

Double surface dressings are more durable than single surface dressings and are used for surfacing newly constructed roads. They can also be used in the maintenance of existing roads, at locations where the surface is slightly cracked or patched and more protection is required than can be provided by a single surface dressing. To form a double surface dressing, an additional layer of bitumen and smaller chippings is applied. The second layer of chippings generally fills the voids in the first layer and helps to lock the aggregate in place. A surface dressing can be used on roads carrying up to 1000 - 2000 vehicles per lane per day.

If MC 3000 binder is used, it is recommended that slow moving traffic is allowed to run for two to three weeks on the first layer before the second layer is applied. This is to allow volatiles from the first layer to evaporate so that they are not trapped by the second layer. Trapped volatiles will soften the upper layer of bitumen and cause bleeding. The traffic will also aid the orientation and embedment of the first layer of chippings into the road surface. However there is a risk of windscreen damage due to loose chippings, particularly with larger stone. MC 3000 is much more tolerant to difficult conditions such as dusty chippings and low surface temperatures than 80/100 penetration grade bitumen.

A fog spray is sometimes added to a single or double surface dressing to reduce the possibility that chippings can be whipped off by traffic. A fog spray is also recommended if using bitumen emulsion in the tack coat.

Figure 4: Double surface dressing

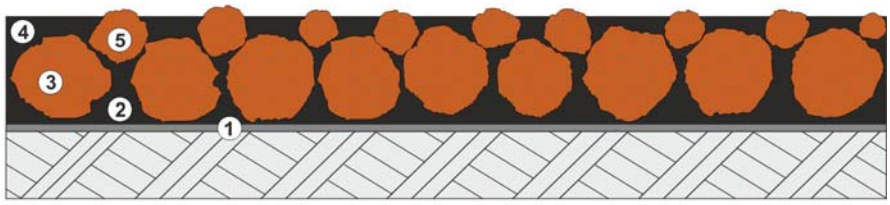

1 Prime coat
2 Binder (tack coat)
3 Larger aggregate
4 Binder (seal coat)
5 Smaller aggregate

1.7.4 Racked-in Surface Dressings

This type of surface dressing is recommended only in special conditions, when traffic is particularly heavy or fast. To construct a racked-in surface dressing a heavy layer of binder is applied, with prime if required, and given 90% coverage with a layer of large chippings. A layer of small chippings is then immediately applied and should 'lock-in' the larger chippings, forming a stable mosaic.

More bitumen is used in racked-in surface dressings than in a single surface dressing, but less than is used in a double surface dressing. The appropriate binder design will depend on the aggregate rate of spread. A racked-in surface dressing has several advantages over single surface dressings: there is less risk of chippings being dislodged because mechanical interlock ensures it has early stability and the surface texture is better. However, racked-in surface dressings can be prone to bleeding.

Figure 5: Racked-in surface dressing

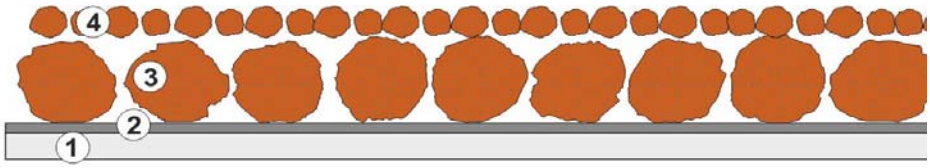

1 Existing base
2 Binder
3 Larger aggregate at 90% application rate
4 Smaller aggregate

1.7.5 Sandwich Surface Dressings

A sandwich surface dressing is mainly used on existing road surfaces that are rich in bitumen; they may sometimes be used on gradients to reduce the tendency of the binder to flow down the slope. As the existing surface is rich in bitumen, no prime coat or tack coat is applied in the construction of sandwich surface dressings.

A layer of chippings is placed directly onto the road surface; the first layer of bitumen is then applied, followed by a layer of smaller chippings. Thus there is one layer of bitumen 'sandwiched' between the two layers of chippings.

Figure 6: Sandwich surface dressing

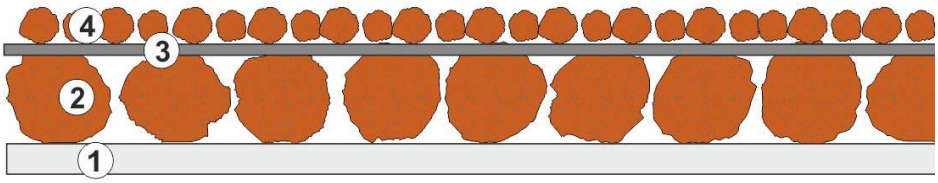

1 Existing base
2 Larger aggregate
3 Binder
4 Smaller chippings

1.7.6 Pad Coats

This type of surface dressing is used where the hardness of the existing road surface allows very little embedment of the first layer of chippings. Road bases constructed from cement stabilised materials and dense crushed rock can fall into this category. The hardness of the existing surface should be determined using a MEXE Cone Penetrometer. When the penetration is less than 3 or 4 mm, there will be very little embedment of chippings in the existing surface of the new road base.

A layer of bitumen is applied to the road surface followed by a layer of small chippings; an additional layer of bitumen and a layer of larger chippings are then applied where required. The smaller chips in the lower layer help the larger chippings in the upper layer to key into the lower layer, providing a good bond. On heavily traffic roads, a fog spray can be used to reduce whip-off of the chippings in the upper layer.

Figure 7: Pad coats

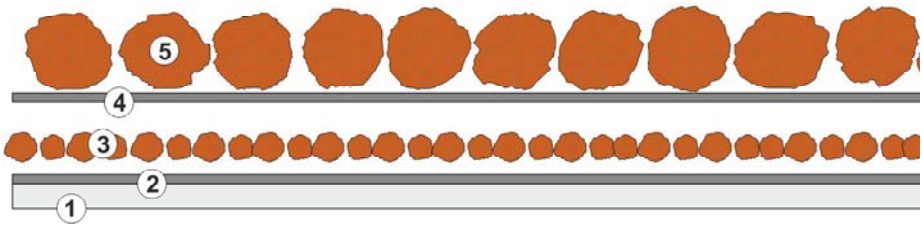

1 Existing base
2 Binder
3 Smaller aggregate
4 Binder
5 Larger Aggregate

1.7.7 Otta Seals

The chief characteristic of an Otta seal is that it uses graded aggregate with a range of sizes, including filler material, instead of a single sized aggregate. This type of seal can be constructed in single or double layers; the latter is usually recommended. A single sand seal can also be applied to the Otta seal to give it further durability. This type of seal can provide a highly cost-effective solution, with an expected service life of more than ten years.

Otta seals are appropriate for secondary and tertiary roads with low to medium volumes of traffic, with Average Annual Daily Traffic (AADT) of less than 1000. They should not be used on roads carrying higher volumes of traffic.

Figure 8: Otta seal

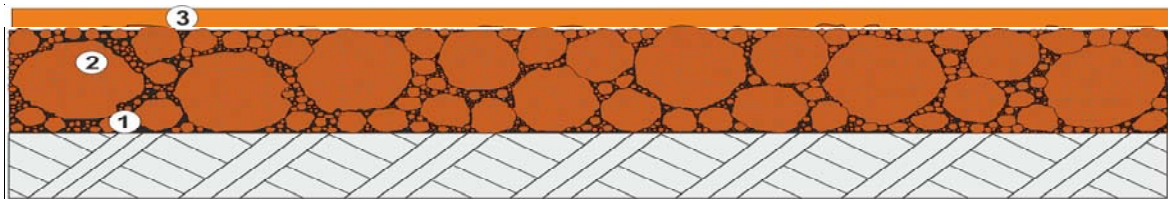

1 Binder
2 Graded aggregate
3 Sand seal

1.7.8 Slurry Seals

These seals are usually mixed on site before being applied to the road surface. They consist of a mixture of fine aggregate, Portland cement filler, bitumen emulsion and water, giving a smooth finish to the road surface. A stable grade anionic emulsion is normally used for slurry seals. Cationic emulsions are normally used in slurries with acidic aggregates, and they can useful where there is a risk of rain during construction due to their early breaking characteristics.

Slurry seals are not normally used for surfacing newly constructed roads as they can be less cost effective than surface dressings, depending on the thickness of slurry used. Slurry seals also are not as durable as surface dressings. They do not provide the same skid resistance as a surface dressing which has a better surface texture.

1.7.9 Cape Seals

A Cape seal consists of a single surface dressing with a slurry seal worked into the voids in the single surface dressing. Cape seals are relatively stiff and durable with the chippings locked in place by the slurry. This type of thin surfacing can carry up to 2000 commercial vehicles per lane per day.

A Cape seal is more expensive than a double surface dressing. The first layer is identical to a single surface dressing, but the slurry has much higher binder content than that used for a single slurry seal.

Figure 9: Cape seal

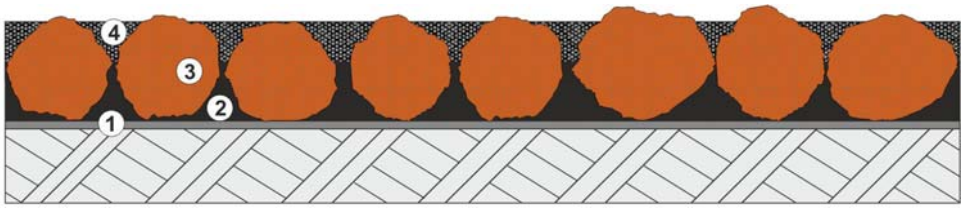

1 Prime coat
2 Binder
3 Aggregate
4 Slurry

1.7.10 Sand Seals

Sand seals should only be used where chippings for a surface dressing are not obtainable or are prohibitively expensive. Sand seals are less durable than surface dressings and abrade away under traffic when natural, rounded sand is used. Better performance can be obtained if the sand seal is given an additional layer within a year.

Sand seals should only be used on very lightly trafficked roads where there are less than 100 vehicles per lane per day and are more often used in combination with other seals, such as an Otta seal. The life of a sand seal depends very much on the quality of the sand. A sand seal can have a substantial life if the portion of the sand sample passing through the 0.75 mm sieve is very low.

Figure 10: Sand seal

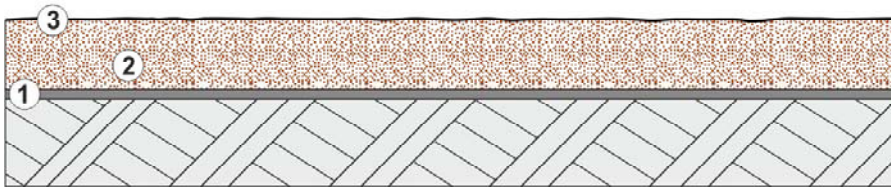

1 Prime coat
2 Binder – Sand layer formed of binder squeezed into the sand.
3 Sand

2 SELECTION OF APPROPRIATE SURFACING

The different types of thin bituminous surfacing are not appropriate for use in all situations. Road conditions vary from site to site and the correct type of surfacing must be selected for each set of conditions.

Important factors affecting the selection of surfacing include:

- The anticipated traffic volume and types of vehicles carried by the road.
- The type of pavement and its strength.
- The characteristics of the materials available.
- The characteristics of the project, whether it is new construction or resealing.
- Environmental conditions of the site.
- Road geometry, sharpness of bends and steepness of gradients.
- Safety.
- Required surface texture.
- Experience of the contractor and consultant.
- Reliability of future maintenance.
- Funds available for the initial construction and future maintenance.

The appropriate selection of surfacing may also differ along the project road, where different sections have different characteristics. The road should be divided into uniform sections and the selection of surfacing made for each section. The process recommended in TRH 3 for selecting an appropriate surfacing is as follows:

- Obtain all relevant information on the road.
- Divide the road into sections of similar condition and similar required surfacing characteristics.
- Identify suitable surfacing solutions for each section.
- Compare initial costs and life cycle costs.
- Compare the influences of factors such as knowledge, skills and available plant of potential contractors.
- Carry out final selection.

2.1 Required Information

Information from initial investigations is important for selecting the correct type of surfacing, as well as the necessary pre-treatment. After the initial stages of selection, further information is required for carrying out effective design. Table 2: shows information that is either essential (E) or desirable (D) for the selection of a surfacing and for the subsequent design in new construction works as well as maintenance resealing work. The information is required for the design of both the surfacing and its associated pre-treatment work. This table is adapted from TRH 3.

Table 2: Information required for initial selection and design of a bituminous surfacing and necessary pre-treatment

Recommend information	Type of bituminous surfacing				Pre-treatment			
	Initial selection		Design stage		Initial selection		Design stage	
	New Build	Reseal	New Build	Reseal	New Build	Reseal	New Build	Reseal
Client requirements with regard to:								
Skid resistance	E	E						
Noise levels	D	D						
Social needs	D	D						
Environmental issues	D	D						
Maintenance capability	E	E			E	E		
Purpose of the seal			E	E				
Standards, specifications			E	E			E	E
Traffic control, limitations and closure duration	E	E	E	E				
Traffic expected:								
Number of light and heavy vehicles per lane per day	E	E	E	E	E	E		
Type of heavy vehicles and typical cargo	D	D	D	D				
Traffic speeds (required texture – skid resistance)	D	D						
Braking, stopping, turning, and positions of occurrence	E	E						
Seasonal variation in traffic patterns and loads	D	D	D	D				
Existing surface condition:								
Type		D	D	D		D		

Recommend information	Type of bituminous surfacing				Pre-treatment			
	Initial selection		Design stage		Initial selection		Design stage	
	New Build	Reseal	New Build	Reseal	New Build	Reseal	New Build	Reseal
Texture and variability across road width and length	E	E		E	E	E		E
Voids to accommodate extra binder		E		D		E		E
Surface cracking		E		E		E		E
Aggregate loss or potential		E		D		E		E
Binder condition		E				E		
Fattiness of existing surface		E		E		E		E
Permeability		D	D	D	D	D	D	D
Age of surfacing		D				D		
Embedment potential			E	E				
Existing structural condition:								
Degree, extent and type of cracking	E	E	E	E	E	E	E	E
Occurrence of pumping		E		E		E		E
Failures, potholes and edge breaking								
Patching, condition and age								
Occurrence of small irregularities influencing riding quality								
Rutting	E	E	D	D	E	E	E	E
Measured deflections and curvature		E		E		E		E
Estimated deflections (seal flexibility)	D	D		D				
Base type	D	E		D				
Moisture condition in the base			E	D			E	E
Crack Activities			D	D			E	D
Material availability, cost and availability of funds	E	E			E	E		

Recommend information	Type of bituminous surfacing				Pre-treatment			
	Initial selection		Design stage		Initial selection		Design stage	
	New Build	Reseal	New Build	Reseal	New Build	Reseal	New Build	Reseal
Aggregate properties			E	E				
Road geometry:								
Gradients	E	E	E			E		
Surface Drainage		E	E			E		
Profile and shape								
Sharp curves	E	E		E				
Intersections and access roads	E	E		E				
Performance history of seals, binders and aggregate in similar environments:	D	D	D	D	D	D		
Climatic conditions	E	E						
Environment:								
Possible surface temperature variations along the road, e.g. due to shade			E	E				
Expected weather conditions during sealing operations			E	E				
Experience and capability of contractors, (including labour intensive) availability of equipment	E	E	E	E	E	E	E	

2.2 Surfacings on Newly Constructed Roads

This section gives guidelines for selecting an appropriate surfacing for new construction in terms of traffic levels, traffic actions, gradient, maintenance capability, required surface texture, construction techniques, environmental conditions, quality of the base and relative costs. The tables in this section, adapted from TRH 3, use the following abbreviations to denote a type of surfacing:

S3 – Sand seal
S7 – Course slurry seal
S1 – Single surface dressing
S2 (10) – Single surface dressing with 10 mm aggregate and sand
S2 (14) – Single surface dressing with 14 mm aggregate and sand
S4 (14) – Cape seal with 14 mm aggregate and one layer of slurry
S2 (14/6) – Double surface dressing with 14 mm and a layer of 6 mm aggregate
S2 (19/10) – Double surface dressing with 19 mm and a layer of 10 mm aggregate
S2 (19/6) – Double surface dressing with 19 mm and one or two layers of 6 mm aggregate
S4 (19) – Cape seal with 20 mm aggregate and two layers of slurry
AC – Asphalt concrete

It should be noted that these tables do not include Otta seals. Guidance on the use of Otta seals is provided in Section 4.3. Table 3 gives guidance for selecting an appropriate surfacing according to traffic levels, in terms of elv (equivalent light vehicles) per lane per day. The following equation is used to define elv:

$$elv = L + 40H$$

where:

L = number of light vehicles per lane per day.
H = number of heavy vehicles per lane per day.

Table 3: Guideline to surfacing types appropriate for specific traffic levels

Traffic volume (elv/lane/day)	Recommended surfacing types for new construction									
	S3	S7	S1	S2 (10)	S2 (14)	S4 (14)	S2 (14/6)	S4 (19)	S2 (19/10) S2 (19/6)	AC
< 750	✓	✓	✓	✓	✓	✓	✓	✓	✓	✓
750 – 2000	x	✓	✓	✓	✓	✓	✓	✓	✓	✓
2000 – 5000	x	x	✓a	✓a	✓a	✓	✓	✓	✓	✓
5000 – 10000	x	x	X	x	✓a	✓	✓	✓	✓	✓
10000 - 20000	x	x	X	x	x	✓a	✓	✓	✓	✓
20000 – 40000	x	x	x	x	x	x	✓a	✓a	✓	✓
> 40000	x	x	x	x	x	x	X	✓a	✓a	✓

a – good performance has been noted in some areas using this type of surfacing with this level of traffic. The use of modified binders and trials on site can reduce risks in these situations.
✓ - this type of surfacing is recommended.
x – this surfacing type is not recommended.

Table 4 gives guidance on the selection of an appropriate seal according to the type of road and the type of traffic experienced.

Table 4: Surfacing types appropriate for traffic and road type combinations

Type of road and type of traffic	Recommended surfacing types for new construction									
	S3	S7	S1	S2 (10)	S2 (14)	S4 (14)	S2 (14/6)	S4 (19)	S2 (19/10) S2 (19/6)	AC
Rural with occasional heavy vehicles	✓	✓a	✓	✓	✓	✓	✓	✓	✓	✓
Residential - developed	x	✓a	✓b	✓	✓	✓	✓	✓	x	✓
Residential - developing	X	✓a	x	x	x	✓	x	✓	x	✓
Urban with occasional heavy vehicles	x	✓a	x	x	x	✓	✓b	✓	x	✓
Urban with many heavy vehicles	x	X	x	x	x	x	x	x	x	✓

a – only recommended with thick slurries, > 10 mm
b – recommended preferably blinded with course sand
✓ - this type of surfacing is recommended for this level of traffic.
x – this surfacing type is not recommended for this level of traffic.

Table 5 gives guidance on the selection of an appropriate seal according to gradient of the road. Steeper gradients impose greater traffic stresses on the surfacing. This can cause damage to the surfacing particularly in the early stages of its life, thus higher durability is required for surfacings on steep gradients.

Table 5: Surfacing types appropriate for different road gradient categories

Gradient	Recommended surfacing types for new construction									
	S3	S7	S1	S2 (10)	S2 (14)	S4 (14)	S2 (14/6)	S4 (19)	S2 (19/10) S2 (19/6)	AC
< 6%	✓	✓	✓	✓	✓	✓	✓	✓	✓	✓
6 – 8%	b, c	a, d	b, c, d	c, d	a, c, d	d	c, d	d	c, d	✓
8 – 12%	a, b, c	x	x	c, d, e	a, c, d, e	d, e	c, d, e	d, e	c, d, e	✓
12 – 16%	x	x	x	x	a, c, d	a, d	a, c, d	a, d	a, c, d	✓
> 16%	x	x	x	x	x	x	x	x	x	x

a – not recommended on stabilised base courses constructed with fine material
b – not recommended if channelling of water flow is expected because of soil wash, common in developing areas.
c – not recommended if urban drainage systems (kerbs) are present.

d – not recommended if communal water systems are present, as these result in detergents being washed onto the road that erode the bitumen.
e – not recommended on gradients over 10% if channelling of flow is expected because of soil wash, common in developing and hilly areas.
✓ - this type of surfacing is recommended for this level of traffic.
x – this surfacing type is not recommended for this level of traffic.

Table 6 gives selection guidance according to the maintenance capability of the local road authority. Often only simple maintenance is required to prolong the life of most surfacings, such as the application of a fog spray or slurry, if it is carried out at the right time.

Table 6: Surfacing types appropriate for different maintenance capabilities

Maintenance capability of road authority	Recommended surfacing types for new construction									
	S3	S7	S1	S2 (10)	S2 (14)	S4 (14)	S2 (14/6)	S4 (19)	S2 (19/10) S2 (19/6)	AC
High – can perform any type of maintenance whenever needed	✓	✓	✓	✓	✓	✓	✓	✓	✓	✓
Medium – routine maintenance, patching and crack sealing on regular basis, but no MMS #	x	a	c	b	b	✓	✓	✓	✓	✓
Low – patching done irregularly, no committed team, no inspection system	x	a	x	x	x	✓	c	✓	c	✓
None	x	x	x	x	x	x	x	x	x	✓

a – only recommended with thick slurries, > 10 mm.
b – recommended in rural areas only.
c – the performance of surface seals is sensitive to design and construction problems.
– it is not essential to have a maintenance management system, but its existence is indicative of a certain level of capability and sophistication.
✓ - this type of surfacing is recommended for this level of traffic.
x – this surfacing type is not recommended for this level of traffic.

The required surface texture of the new surfacing is an important consideration. A rural, high speed road will require a rough surface as this will provide longer lasting skid resistance than a smooth surface. However an urban city street will require a smoother surface that is easier to clean and generates less traffic noise. Thus higher road speeds require higher texture depth; texture depths greater than 0.7 mm are recommended where road speeds are greater than 80 km/h.

Although construction techniques do not differ greatly between different types of seal, the experience and capacity of the contractor should be taken into account when considering the choice of surfacing as this will greatly affect the quality of the work.

Environmental conditions, particularly temperatures experienced on the site, will affect the choice of binder in a surfacing but will not greatly affect the overall choice of surfacing

type. However, in areas of heavy rainfall a surfacing as impermeable as possible should be used. Several practitioners recommend the application of a fog spray and a blinding layer of coarse sand when constructing single surface dressings close to winter, as this reduces the risk of whip off of aggregate while the binder is still fresh.

The quality of the roadbase will determine the overall riding quality of the road when thin bituminous surfacings are used. As thin bituminous surfacings are only one or two stones thick, any undulations or imperfections in the base will reflect through to the surfacing. However, multiple surfacings can even-out minor depressions in the base to a small extent.

The use of large, 19 mm aggregate is recommended on relatively soft bases where there is potential for excessive embedment of the aggregate. This includes road bases constructed from natural gravel. Where a satisfactory finish to the base cannot be provided or where noticeably increasing embedment of the aggregate is likely, thin bituminous surfacings should not be used. In these cases, asphalt concrete or strengthening of the base should be considered.

When a number of different surfacing options are available, the relative costs should be compared in order to determine the most economical solution. As discussed in Section 1, both initial costs and life cycle costs should be considered, including the expected frequency of maintenance required.

2.3 Maintenance Surfacing

2.3.1 Requirement for Resealing

The following visual defects indicate the need for a maintenance reseal of a thin bituminous surfacing:

- Porous surfacing, caused by dry binder or too little binder.
- Surfacing cracks or structural cracks, caused by various mechanisms.
- Loss of stone, caused by dry or inadequate binder.
- Potholes, caused by the growth of structural cracks or by dry binder.
- Smooth surface texture, caused by bleeding or excessive embedment of the aggregate.
- Polishing of the aggregate, caused by tyre abrasion or the use of poor stone.
- Rutting, caused by densification of the base or by pavement failures due to water ingress.

The presence of one or a combination of these factors will affect the choice of maintenance surfacing. Before a maintenance surfacing is constructed, excessively damaged sections of the pavement (from cracking, formation of potholes or the presence of existing patches that are substandard) must be properly repaired.

2.3.2 Single Surface Dressing

A single surface dressing can be applied to a defective existing surfacing using 19 mm, 14 mm 10 mm or 6 mm sized aggregate. A single surface dressing is an effective maintenance tool where the existing surfacing is generally defective, but there are no critical structural problems. Any critical structural problems will need to be corrected before a surface dressing can be effective.

2.3.3 Slurry

Slurry seals are an effective maintenance application where the surface texture of the road varies, for example where the aggregate has been stripped in patches, extensive patching has been carried out, or where the wheel tracks are fatty. Due to their thickness, slurry seals can also even-out small ruts and irregularities. Therefore a slurry seal can provide a uniform surface to which a surface dressing can be applied. Slurry seals should not be placed on smooth surfaces due to the risk of shoving.

2.3.4 Fog Spray

Where the existing binder in a surfacing is dry or aged, its life can be extended by the application of a fog spray or enrichment spray, consisting of diluted emulsion. An anionic stable emulsion is preferred. This should only be used where the existing surface texture allows the mixture to penetrate and not remain on the surface.

3 FIELD INVESTIGATIONS

3.1 Overview

Before undertaking the design of a thin bituminous surfacing, field investigations must be carried out in order to obtain information for selecting the correct type of surfacing, as well as the necessary design parameters. This applies to both maintenance of existing bituminous surfaces and new road construction.

If traffic data is not available, traffic surveys will need to be conducted in order to determine traffic levels on the project road.

3.2 Traffic Survey Data

3.2.1 Traffic Counting

A survey must be carried out if traffic survey data does not exist for the road on which a thin bituminous surfacing is to be applied. The volume of traffic is a crucial parameter in the design process.

The first step in estimating traffic flows over the design life of the thin bituminous surfacing is to assess the baseline traffic flow[3]. This assessment should be based on a classified count of the cars, small trucks, large trucks and buses currently using the road. From this data the AADT currently using the road is determined. The AADT is defined as the total annual traffic summed for both directions along the road and divided by 365. It is usually obtained by recording traffic flows over a shorter period, from which the AADT is then estimated. It should be noted that the traffic loading in one direction only is required for design purposes; this must be taken into account when interpreting AADT figures.

Traffic surveys are often subject to significant errors due to the large variation in daily, weekly, monthly and seasonal traffic on a road. The variations tend to be greater on roads carrying less than 1000 vehicles per day. These errors will be particularly pronounced if the survey is only carried out over two or three days, as the variation in traffic is greater from day to day than from week to week. Thus a traffic survey covering a whole week gives greater accuracy. As traffic levels also vary from month to month, a weekly traffic survey repeated at intervals throughout the year gives the best results. The following points illustrate best practice in traffic surveys:

- Traffic counts are carried out for seven consecutive days.
- Traffic counts on some of these seven consecutive days are carried out over 24 hours, with at least one 24 hour count carried out on a weekday and one during a weekend. On the other days, traffic counts carried out over 16 hours are sufficient. Where 16 hour traffic counts are carried out, the data should be used to estimate the full 24 hour traffic flow, using the same proportion as occurs on the days for which 24 hour traffic counts are conducted.
- Traffic counts should be avoided when traffic flow is unrepresentative for short periods due to factors such as the payment of wages and public holidays. If unusual traffic flows exist for extended periods, such as during harvest, this must be taken into account in the AADT assessment.

[3] TRL, Overseas Road Note 31. A guide to the structural design of bitumen-surfaced roads in tropical and sub-tropical countries, 4nd Edition, 1993.

- The traffic counts carried out over 7 consecutive days should be repeated several times during the year.

The traffic likely to occur during construction must be considered. Dual directional traffic is important as surfacings are usually constructed one lane at a time, meaning that one lane is closed to traffic during construction and traffic control measures are required.

3.2.2 Equipment

Although automatic counters in their most basic form cannot distinguish different vehicle categories, there are modern automatic traffic counters that can discern between the different types of vehicle using the road and thus give a classified traffic count.

Automatic counters can be pneumatic tubes rolled out across the road surface or a wire loop fixed to the road surface. Wire loops are preferred as pneumatic tubes can be subject to vandalism and require regular maintenance. It is also preferred if the wire loops are buried just beneath the road surface, but this is more expensive and more complicated. The most common traffic counts are carried out manually and this can be done in conjunction with automatic counts.

3.2.3 Traffic Forecasting

Traffic that will occur within the first two years of the life of the surfacing must be considered. Traffic can be divided into three categories:

- Normal traffic: traffic that is currently using the road and will continue to do so.
- Diverted traffic: traffic that continues to travel between the same origin and destination, but changes from a different parallel route to use the road due to its improved pavement.
- Generated traffic: additional traffic that occurs due to the improvement of the road.

The magnitude of these effects will depend on whether the thin bituminous surfacing is being carried out as part of maintenance work or the construction of a new road. If the thin bituminous surfacing is being carried out as maintenance on a road that is already in a reasonable condition, the effects of diverted and normal traffic may not be very great. If a thin bituminous surfacing is carried out as part of wider base repair works, the reconstruction of a nearly impassable road, or where a completely new road is being built, the effect of diverted and generated traffic can be very important.

Growth factors developed for a region can be used estimate the growth in normal traffic during the life of a surfacing.

If traffic survey data does not exist, records of countrywide fuel sales can be used to estimate the appropriate traffic growth rate, which is linked to economic conditions. It is important to note that it is only reasonably reliable to predict normal traffic growth for approximately the same number of years for which data exists, and for the period that the current economic conditions are expected to last. It is also important to take account of traffic generated by new projects in the area. These projects can lead to a greater increase in heavy trucks rather than vehicles of other categories.

When assessing traffic increases on the road due to diverted traffic, it is important to be aware of parallel routes to the road being surfaced or other roads providing access to the same destination from the same origin. When the surfacing will improve the condition compared with alternative parallel routes and thus give a shorter journey time, traffic will change from these alternative routes. The shorter journey times will provide a cheaper option provided that all related costs are taken into account. An origin and destination survey should be carried out at the project site in order to assess the likely volume of diverted traffic. Diverted traffic is usually assumed to have the same growth rate as normal traffic.

Generated traffic is more difficult to assess. It can be entirely due to the improvement in the road, or due to increased development around the road subsequent to its improvement. The recommended approach to assessing generated traffic is to use demand relationships. The price elasticity of demand for transport is the responsiveness of traffic to reduced transport costs caused by an investment in the road. On inter-urban roads a distinction is made between freight and passenger traffic. A distinction is also made between agricultural and non-agricultural traffic on roads providing access to rural areas.

Several evaluation studies carried out in developing countries show a range of between -0.6 to -2.0 for the price elasticity of demand for transport, with an average of about -1.0, meaning that a 1% decrease in transport costs leads to a 1% increase in traffic. Calculations should be based on door-to-door travel costs estimated as a result of origin and destination surveys.

3.3 Assessment of Existing Road Condition

It is crucial to make an assessment of the condition of the existing road, as this will affect the type of surfacing that is required and will influence the surfacing choice. It is also important to note that a thin bituminous surfacing will not improve the structural strength of the road nor correct structural defects. A thin bituminous surfacing will only improve the durability of the road by providing a waterproof seal. Therefore it will be a waste of valuable funds if a thin bituminous surfacing is constructed on a road with a substandard pavement.

The condition of the road should be assessed at intervals of approximately 100 m along the entire length of road on which a surfacing is to be constructed. This assessment will provide information about the severity and extent of any defects, and enable the most cost-effective solution to be determined.

Factors such as road surface hardness may not be consistent along the entire stretch of road, and it is possible that the design of the surfacing may vary along the project road.
The base preparation and repair of existing roads is illustrated in more detail in Section 1. Suitable procedures for carrying out visual condition assessments of the road are described in TMH 9 and TRH 6.

3.4 Road Surface Hardness

3.4.1 MEXE Cone Penetrometer

Assessing the hardness of the road surface provides crucial design data, as this parameter affects the embedment of the chippings into the road surface as well as the amount of bitumen the voids in the layer of chippings can accommodate.

The Military Engineering Experimental Establishment in the UK has developed the MEXE Cone Penetrometer, shown in Figure 11 for measuring the strength of in-situ soils. This instrument has been modified and is used for determining the hardness of the road surfaces for use in the design of surface dressings. The original cone has been replaced by a 4 mm diameter, hardened steel rod with a hemispherical tip. The test method is described below.

The steel rod is pushed into the road surface under a load of 35 kg, applied for 10 seconds, and the penetration of the rod, in millimetres, is determined from the movement of a collar that slides up the rod during the test. The temperature of the surface is measured, and the readings are converted to the equivalent values at a standard surface temperature of 30 °C. Measurements are taken in the nearside wheel path where the maximum embedment of chippings is normally expected. Within each 250m long road section a typical 5m to 10m long sub-section is subjected to testing at 0.5m intervals so that a minimum of 10 tests are carried out in the test area. A CUSUM analysis is then carried out and the effective section lengths are defined by the location of the major changes in the slope of the CUSUM Curve. The CUSUM Curve is the cumulative sum of the mean value of all the values determined from the results at every test location minus the actual value at each location. The mean of the hardness values at each location in each section is used as the design hardness for that section.

If the chosen test point is in a small depression, an initial reading must be taken as well as the final reading, the difference between these two readings being the correct penetration. Tests should not be carried out in any areas that have been recently patched. The tip of the probe should not be placed on large stones as this will distort the readings.

The mean of the group of readings for each location, corrected for temperature, is taken as the representative penetration for that location.

Figure 11: MEXE Cone Penetrometer

3.5 Depot Tray Test

The Depot Tray Test is usually carried out in the contractor's yard. This stationary test is conducted by spraying bitumen into a series of narrow steel trays. It is important for assessing whether the transverse distribution of bitumen from the spray bar is uniform, and for preventing streaks of bitumen rich and bitumen deficient dressing, which leads to a loss

of aggregate. Distributors should be tested at regular intervals and before the distributor is used in thin bituminous surfacing work. The method of test is described below.

The apparatus consists of a wheeled trolley containing a set of removable steel trays that are 50 mm wide, 1000 mm long and 150 mm deep, made from 0.9 mm thick mild steel, and with approximately 7 litres capacity. The containers extend 150 mm beyond each end of the full spray width and there are six containers per 300 mm of spray. The rim of each container is lipped on one side so that the containers overlap, in order to prevent binder escaping. Each container is checked for defects before testing and any defective containers are replaced.

A short, preliminary spray is made in order to check that the distributor is operating correctly. The distributor is reversed into position with the spray bar positioned over the testing apparatus, which must be level. The spray bar must be horizontal and positioned at the same height above the containers as it is above ground during normal spraying. The sprayer is then operated under normal operating conditions, for long enough to almost fill the containers.

In a constant pressure machine the temperature and the pressure must be checked but in a constant volume machine the revolutions of the pump, the spray bar width and the temperature are important.

After running the test spray the distributor is moved forward from the trays. The level of binder is measured in each separate container by dipping a ruler into each tray, after the froth has settled. The tolerance for percentage deviation from the average is ± 15%.

From these dip measurements the distribution pattern of the spray bar can be determined. The amount of binder sprayed during the operating time can also be determined, allowing the output of the spray bar to be calculated.

The average spray across the containers is calculated, and the spray in each container checked for variation to the average. This is shown using the graph in Figure 12:, which displays a set of typical results taken from BS 1707. The test results beyond the effective width of the spray bar are not taken into account when calculating the mean.

When the output of the spray bar is known, it is possible to assemble the "speed chart" to determine the forward speed at which the distributor needs to travel to give a particular spay rate.

The spray rate of the spray bar of a constant pressure distributor will vary according to the viscosity of the particular binder being sprayed. More than one spray-bar test may be necessary if different binders are to be used in a surface dressing operation. The viscosity of a particular binder will also change if the spraying temperature changes.

The test is described in BS 1707[4].

[4] BS1707 Specification for hot binder distributors for road surface dressing, 1989.

Figure 12: Average deviation from mean spray depth

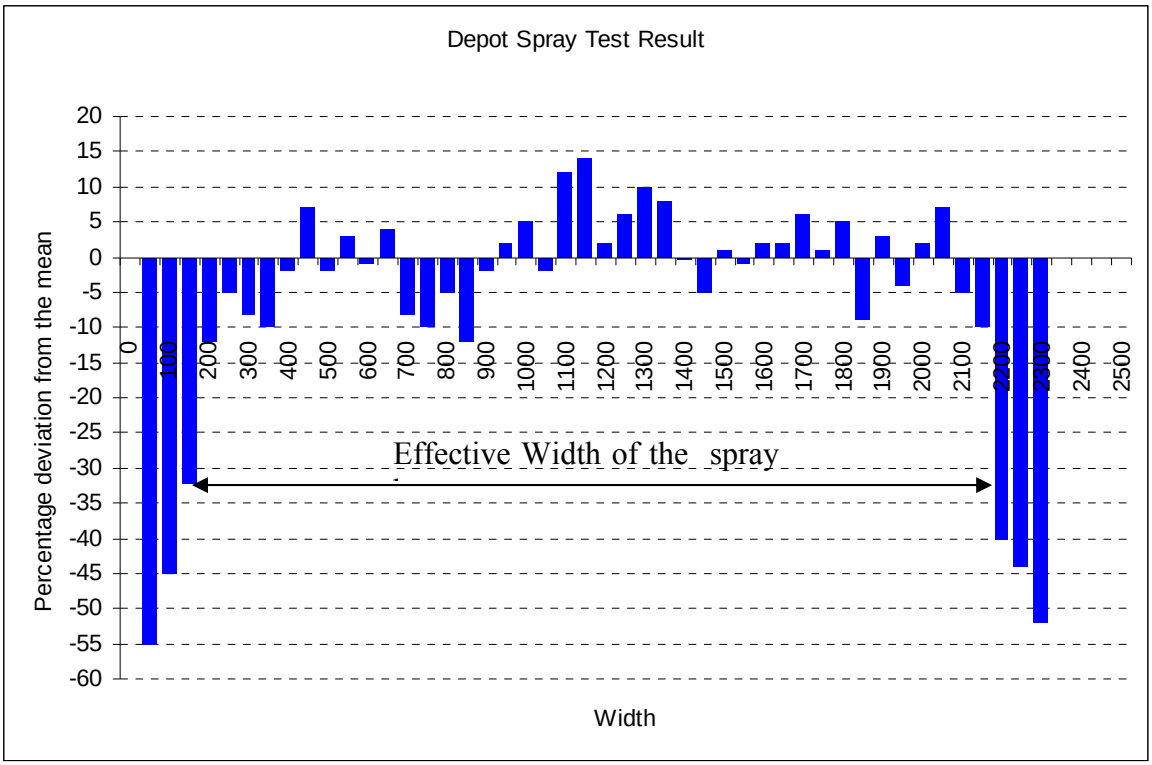

Figure 13: Depot Tray test in Nepal

Figure 14: The depot spray test after spraying has finished

Figure 15: Measuring the bitumen in each tray

3.6 Bakkie Test

The Bakkie Test is another test that can be carried out on site in order to check for variability in the quantity of bitumen delivered across the spray bar. This test is carried out with the distributor stationary.

A series of containers, called 'Bakkies', are laid out underneath the spray nozzles. These containers should be deep, square shaped buckets. The spray bar is then operated for a measured time. Each Bakkie is weighed and the average calculated, to determine the variability in the rate of spray across the spray bar. For conventional penetration grade bitumen, cut-back bitumen and emulsions the spray rate across the spray bar should be within ± 5% of the specified spray rate at the spraying temperature. The top of the Bakkies

should be close to the spray bar, so that it is clear specifically which nozzles are spraying into each Bakkie.
The transverse distribution across the spray bar can also be checked with steel trays, using the same principle as the Bakkie test. Although not as accurate, this can be useful where no deep, square shaped buckets are available.

4 DESIGN OF BITUMINOUS SURFACINGS

4.1 Specifications

Many countries have their own specifications for the design of thin bituminous surfacings. The UK specification is Overseas Road Note (ORN) 3, which is widely used for work in tropical and subtropical countries. It was produced by the Overseas Unit of the Transport Research Laboratory (TRL). The design methods for surface dressings given in this manual are based on ORN 3, therefore all surface dressing designs carried out using this Manual should comply with ORN 3. The Manual also complies with the ERA Standard Technical Specification 2002, Series 6000: Bituminous Surfacings and Road Bases. For the design of Cape seals, the South African TRH 3 should be used. Publication no. 93, 'Guide to the Use of Otta seals' from the Norwegian Public Roads Administration should be used for the design of Otta seals.

The design procedure for thin bituminous surfacings should be carried out to specification, in order to ensure that the correct rates of application are used for the bitumen and the chippings. While there are good manuals available for the design of surface dressings, the design of other types of thin bituminous surfacings is not as well developed and engineering judgement and experience are important.

4.2 Surface Dressings

4.2.1 Prime Coat

A prime is applied to the road surface in order to bind the top of the base, as well as increasing the bond between the surface dressing and the road base. A light spray of water is applied to the surface immediately before the prime is applied as this helps to suppress dust. The light spray of water also helps the priming bitumen to spread and penetrate into the base by reducing surface tension. The prime should penetrate 4 to 10 mm into the base and should dry within a few hours. Priming also ensures that the required amount of bitumen for the surfacing is available by preventing any bitumen being soaked up into the pavement material.

The spray rate for the prime coat is selected so that the prime binds at least the top 4 mm of the base if possible. The spray rate also depends on drying time and usually lies within the range of 0.3 to 1.1 kg/m^2. MC 30, MC 70 or invert bitumen emulsion can be used for the prime. MC 30 is more applicable for a base with lower permeability and MC 70 is used on a more porous base when the penetration exceeds 10 mm. Invert emulsion is typically manufactured from MC 30, slightly cut back further and then water added.

4.2.2 Chippings used in Surface Dressings

There are a number of properties that the chippings used in surface dressings should ideally have:

- Strong, durable and sound.
- Not susceptible to the polishing action of traffic.
- Single sized within a practical tolerance.
- Clean and free from dust.
- Cubical in shape, not rounded or flaky.

It is usually impossible to obtain chippings that meet all of these requirements, therefore some compromise is necessary. Tests should be carried out to check the following properties of the chippings:

- Grading
- Flakiness index
- Aggregate crushing value (ACV)
- Aggregate abrasion value (AAV)
- Polished stone value (PSV)
- Bitumen affinity (the tendency of the aggregate to adhere to the bitumen).

Grading sizes and tolerances are shown in Table 7, Table 8 and Table 9. It is not possible to crush rock and produce aggregate that is perfectly cubical, therefore some degree of tolerance must be applied.

Flaky chippings are defined as those with a thickness, or smallest dimension, less than 0.6 times the nominal size. The flakiness index is the percentage of chippings that fall into this category. The maximum allowable flakiness index for 14 and 20 mm chippings is 25% and 30% for 10 mm aggregate. Tests are not carried out on 6 mm chippings.

The chippings must have a maximum Los Angeles Abrasion (LAA) value of 30 after 500 revolutions.

The ACV is an indication of chipping strength and allowable values usually lie in the range of 20 to 35. Medium to heavily trafficked roads must have chippings with a maximum ACV of 20. On lightly trafficked roads it may be acceptable to have an ACV up to 35 but it is preferable to have chippings with a maximum ACV of 20.

The maximum sodium sulphate soundness value of the chippings is 12, as required by specifications.

The PSV is defined as the resistance of the chippings to the polishing action of traffic. The resistance to skidding of the road surface will be reduced if the chippings become overly polished, and the required PSV depends on the speed and volume of traffic on the road. The long term skid resistance of the road is also dependant on the durability of the exposed chippings as indicated by the AAV. It is not essential to test the AAV if the chippings from a particular source have performed well previously in the area. Minimum PSV for chippings are shown in Figure 16. If enough time elapses before a reseal is applied to a double surface dressing, so that the first layer of chippings becomes substantially exposed, the PSV specification should be applied to the chippings in both the bottom and the top layer. If chippings that meet the specification are prohibitively expensive and the site is a low volume road, the costs for alternative locally available stone should be investigated before marginal material is rejected.

When aggregate is pre-coated with kerosene or diesel, all the volatiles in the contact area between the chippings and binder must evaporate before allowing controlled traffic onto the road. In addition, pre-coated aggregates should be checked before being used with emulsions to ensure that they will not influence the breaking of emulsion, particularly if hard bitumen coated chippings are used. Most chippings have a stronger attraction to water than to bitumen. The adhesion between the chippings and the bitumen can be assessed

using the Modified Immersion Tray Test. This test identifies whether the aggregate is likely to strip and indicates the percentage of adhesion agent required to prevent stripping.

The Modified Immersion Tray Test is carried out as follows:

- A 1.5 mm layer of binder is poured onto a small tray and allowed to cool to the expected road surface temperature.
- At least 10 damp, but not shiny wet, chippings are placed in the film of binder and left for 10 minutes. Several of the chippings are then removed to confirm their coating.
- Water is added to about half the depth of the remaining chippings at the chosen test temperature. The chippings are withdrawn after 10 minutes and the degree of coating is noted.
- If the coating is less than 90% on any one of the chippings, then the test should be repeated with different percentages of adhesion agent added to the binder.
- The percentage of adhesion agent which coats at least 90% of the contact area of all chippings, after soaking, is to be determined and used for the surface dressing.

If the chippings are dusty, the adhesion of the bitumen will be poor. The dust should be removed with water if possible. If water is not available within a reasonable haulage distance, or if they become dusty again when they are transported to site, the chippings can be pre-coated with a light spray of creosote, diesel or kerosene at ambient temperature. This can be easily carried out if the chippings are transferred from the stockpile to the trucks by a belt conveyor. The amount of creosote, diesel or kerosene used will vary from approximately 0.5% by mass for 20 mm chippings to 1.0% for 6 mm chippings. Hard bitumen can also be used as a pre-coat, although this requires a premix plant on site. Hard bitumen pre-coating cannot be used with most emulsions, due to the adverse effects on the breaking of the emulsion.

Table 7: Specified sizes for given nominal sizes[5]

Nominal Size	Specified size	
	Passing BS test sieve[1]	Retained on BS test sieve
20	20	14
14	14	10
10	10	6.3
6	6.3	3.35

[5] TRL, Overseas Road Note 3, A Guide to Surface Dressing in Tropical and Sub-Tropical Countries, 2nd Edition, 2000.

Table 8: Grading limits, specified size and maximum flakiness index for surface dressing aggregates

Grading limits BS test sieve*	Nominal size of aggregates (mm)			
	20	14	10	6.3
28	100	-	-	-
20	85-100	100	-	-
14	0-35	85-100	100	-
10	0-7	0-35	85-100	100
6.3	-	0-7	0-35	85-100
5.9	-	-	0-10	-
3.35	-	-	-	0-35
2.36	0-2	0-2	0-2	0-10
0.6	-	-	-	0-2
0.075	0-1	0-1	0-1	0-1
Specified size	Minimum percentage by mass retained on BS test sieve			
	65	65	65	65
Maximum flakiness index	25	25	25	-

*In accordance with BS 410 (1986), specification for test sieves

Table 9: Grading limits, specified size and maximum flakiness index for surface dressing aggregates for lightly trafficked roads

Grading limits BS test sieve*	Nominal size of aggregates (mm)			
	20	14	10	6.3
28	100	-	-	-
20	85-100	100	-	-
14	0-40	85-100	100	-
10	0-7	0-40	85-100	100
6.3	-	0-7	0-35	85-100
5.9	-	-	0-10	-
3.35	-	-	-	0-35
2.36	0-3	0-3	0-3	0-10
0.6	0-2	0-2	0-2	0-2
0.075	-	-	-	-
Specified size	Minimum percentage by mass retained on BS test sieve			
	60	60	65	65
Maximum flakiness index	35	35	35	-

* In accordance with BS 410 (1986), specification for test sieves

Lightly trafficked roads are defined in ORN 3 as carrying less than 100 vehicles per day.

Figure 16: Minimum PSV for chippings

<table>
<tr><th rowspan="2">Site Definition</th><th colspan="14">Traffic (cv/l/d) at design life</th></tr>
<tr><th>0 to 100</th><th>101 to 250</th><th>251 to 500</th><th>501 to 750</th><th>751 to 1000</th><th>1001 to 1250</th><th>1251 to 1500</th><th>1501 to 1750</th><th>1751 to 2000</th><th>2001 to 2250</th><th>2251 to 2500</th><th>2501 to 2750</th><th>2751 to 3250</th><th>Over 3250</th></tr>
<tr><td>1. Motorway (main line).

Dual Carriageway (all purpose)
Non-event sections.

Dual Carriageway (all purpose)
Minor junctions.</td><td colspan="8">55</td><td colspan="2">57</td><td colspan="2">60</td><td>65</td><td>68</td></tr>
<tr><td>2. Single Carriageway non-event sections.

Single carriageway minor junctions.</td><td>45</td><td>50</td><td colspan="2">53</td><td>55</td><td colspan="2">57</td><td>60</td><td colspan="2">63</td><td colspan="2">65</td><td colspan="2">68</td></tr>
<tr><td>3. Approaches to and across major junctions (all limbs).

Gradient 5%-10%, longer than 50 m (dual downhill; single uphill and downhill).

Bend (not subject 64 kph or lower speed limit) radius 100-250m.

Roundabout.</td><td>50</td><td>55</td><td>57</td><td colspan="2">60</td><td colspan="2">63</td><td colspan="2">65</td><td colspan="2">68</td><td colspan="3">Over 70</td></tr>
<tr><td>4. Gradient > 10% longer than 50 m (dual downhill; single uphill and downhill).
Bend (not subject to 64 kph or lower speed limit) radius < 100m.</td><td>55</td><td>60</td><td colspan="2">63</td><td colspan="2">65</td><td colspan="2">68</td><td colspan="3">Over 70</td><td colspan="4" rowspan="2"></td></tr>
<tr><td>5. Approach to roundabout traffic signals, pedestrian crossing, railway level crossing, etc.</td><td>63</td><td>65</td><td colspan="2">68</td><td colspan="7">Over 70</td></tr>
</table>

4.2.3 Chipping Size and Application Rate

The nominal size of chippings used in surface dressing depends on the volume of traffic on the road and the hardness of the road surface, as measured with the modified MEXE Penetrometer. Table 10 and Table 11 show recommended sizes for nominal chippings and the categories of road surface hardness.

Table 10: Recommended nominal size of chippings (mm)

Type of surface	Approximate number of commercial vehicles with an unladen weight greater than 1.5 tonnes currently carried per day in the design lane				
	2000-4000	1000-2000	200-1000	20-200	Less than 20
Very hard	10	10	6	6	6
Hard	14	14	10	6	6
Normal	20[Ø]	14	10	10	6
Soft	*	20[Ø]	14	14	10
Very soft	*	*	20[Ø]	14	10

The size of chipping specified is related to the mid–point of each lane traffic category. Lighter traffic conditions may make the next smaller size of stone more appropriate.

* Unsuitable for surface dressing.

[Ø] Very particular care should be taken when using 20 mm chippings to ensure that no loose chippings remain on the surface when the road is opened to unrestricted traffic as there is a high risk of windscreen breakage.

Table 11: Categories of road surface hardness

Category of surface	Penetration[1] at 30°C (mm)	Definition
Very hard	0-2	Concrete or very lean bituminous structures with dry stony surfaces. Negligible penetration of chippings under the heaviest traffic.
Hard	2-5	Likely to be an asphalt surfacing which has aged for several years and is showing some cracking. Chippings will penetrate only slightly under heavy traffic.
Normal	5-8	Typically, an existing surface dressing which has aged but retains a dark and slightly bitumen-rich appearance. Chippings will penetrate moderately under medium and heavy traffic.
Soft	8-12	New asphalt surfacings or surface dressings which look bitumen-rich and have only slight surface texture. Surfaces into which chippings will penetrate considerably under medium and heavy traffic.
Very soft	>12	Surfaces, usually a surface dressing which is very rich in binder and has virtually no surface texture. Even large chippings will be submerged under heavy traffic.

For 20 mm chippings the use of a fog spray is recommended in order to hold these chippings more firmly.

The average least dimension (ALD) is the average thickness of the chippings when laid flat, the vertical thickness being the 'least' or the smallest dimension of each chip. The ALD is required to determine the application rate of the bitumen and can be determined in two ways:

1. A representative sample of approximately 200 chippings is taken and the least dimension of each is measured manually. The average value is then taken as the ALD.
2. The second method uses a grading analysis of a representative sample of chippings to determine the median size of the sample (the particle size indicated by the sieve through which 50% of the sample passes). The flakiness index is then also determined. The median size and the flakiness index are used in the nomograph in Figure 17 to determine the ALD.

An estimate of the spread rate of the chippings can be obtained from the equation:

$$\textit{Chipping application rate } (kg/m^2) = 1.364 \times ALD$$

This equation assumes that the chippings have a loose density of 1.35 Mg/m^3.

Figure 17: Determination of average least dimension

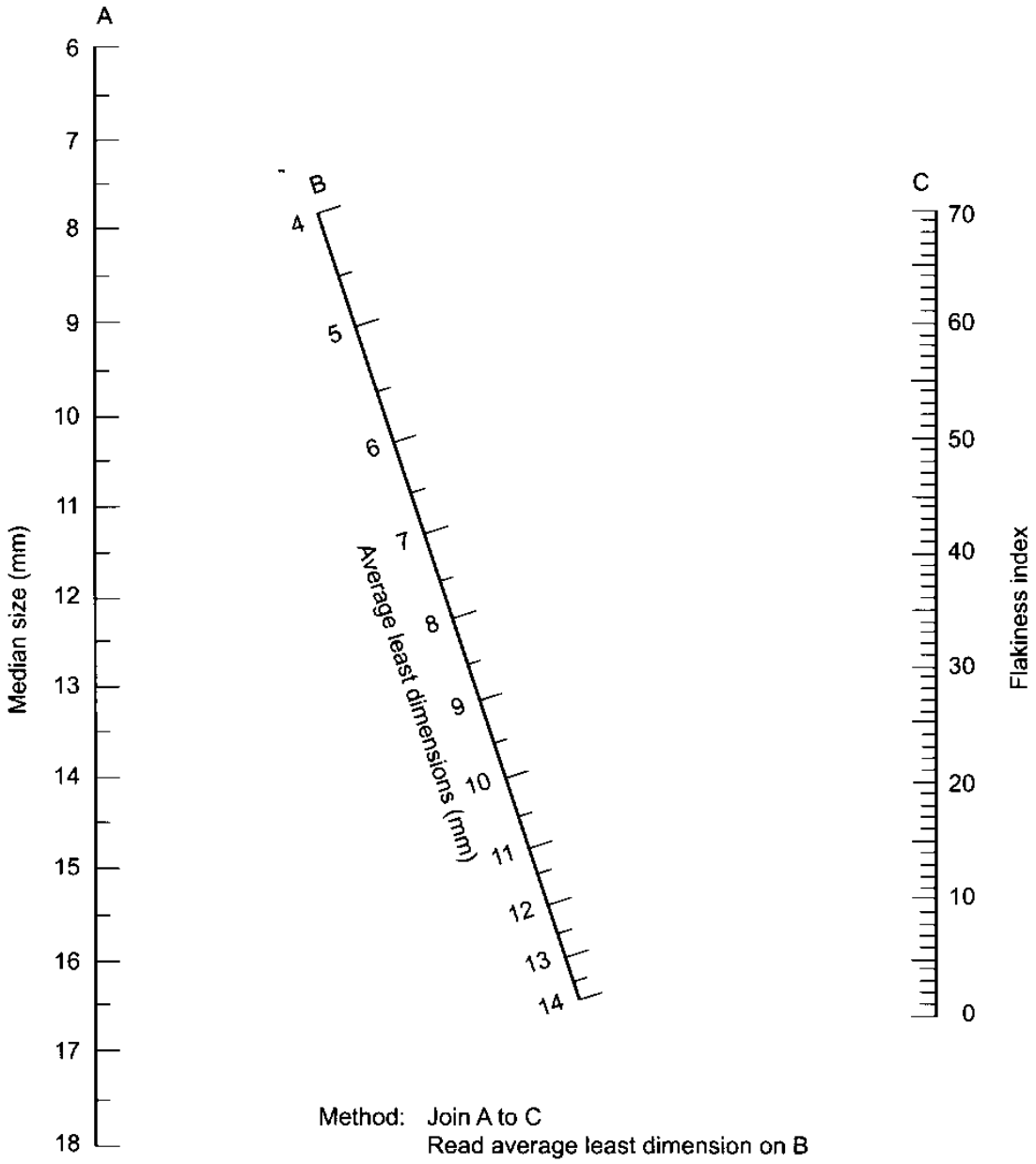

4.2.4 Type of Bitumen used in Surface Dressings

The type of bitumen used will be largely influenced by the availability of different types in the area where the surface dressing is carried out, and the associated costs. The choice of bitumen is also affected by the following requirements. The bitumen must:

- Be capable of being sprayed and wetting the road surface in a continuous film;
- Not run off the road surface on the camber or form pools in local depressions;
- Wet the chippings and adhere to them at ambient temperature, the adhesion being strong enough to resist traffic forces at the highest ambient temperature;
- Remain flexible at the lowest ambient temperature, neither cracking nor becoming brittle enough to allow traffic to remove chippings.

It is not normally possible to satisfy all of these requirements; therefore the choice of binder should give the best possible compromise.

Figure 18 shows the appropriate viscosity ranges for hot binders for light and heavy traffic loadings. It also plots the changes in viscosity of penetration grade bitumen and various cutback bitumens. This diagram does not apply to bitumen emulsions. The temperature of the road surface must be determined so that a binder that has the required viscosity at that temperature can be identified.

The minimum road surface temperatures are given in Figure 18, which is used in the ERA Design Manual[6]. MC 3000 is much more tolerant to changes in the road surface temperature than penetration grade bitumen and is recommended for general use in all high altitude areas of Ethiopia. MC 3000 is also more tolerant to problems such as dusty chippings. Surface dressing operations should be halted when the road surface temperature starts to drop.

With the exception of some emulsions, MC 3000 is the most fluid binder used for surface dressings, except in very cold conditions. These cold conditions are not normally experienced in the tropics and sub-tropics. MC 3000 is created by blending 80/100 pen bitumen with 12 to 17% of cutter. In some areas there is only a small range of binders available, therefore it is sometimes necessary to blend two different grades of bitumen or to cut back 80/100 pen bitumen with diesel, kerosene or a mixture of both. Penetration grade bitumen and a cutting agent may be blended in the distributor or in a suitable storage tank; but this should only be attempted by properly trained personnel.

Cationic emulsion with a bitumen content of 60 to 70% (dependant on the formulation of the cationic emulsion and whether it is stable grade or spray grade) is the most common emulsion used in surface dressings. It will break rapidly on contact with most types of chippings. Good initial bonding is ensured by the cationic emulsifier. The emulsion is likely to drain from the road in places where there is a steep gradient or camber, or a heavy application rate of bitumen is required. This can be prevented by splitting the bitumen application, with a lighter initial spray followed by a heavier application after the chippings have been applied. In the case of a single surface dressing, the second application of emulsion should be applied after brooming and rolling the aggregate.

[6] It is noted that these temperatures differ from the minimum temperatures given in the ERA Standard Specification

Figure 18: Preferred choice of binder for road surface temperatures

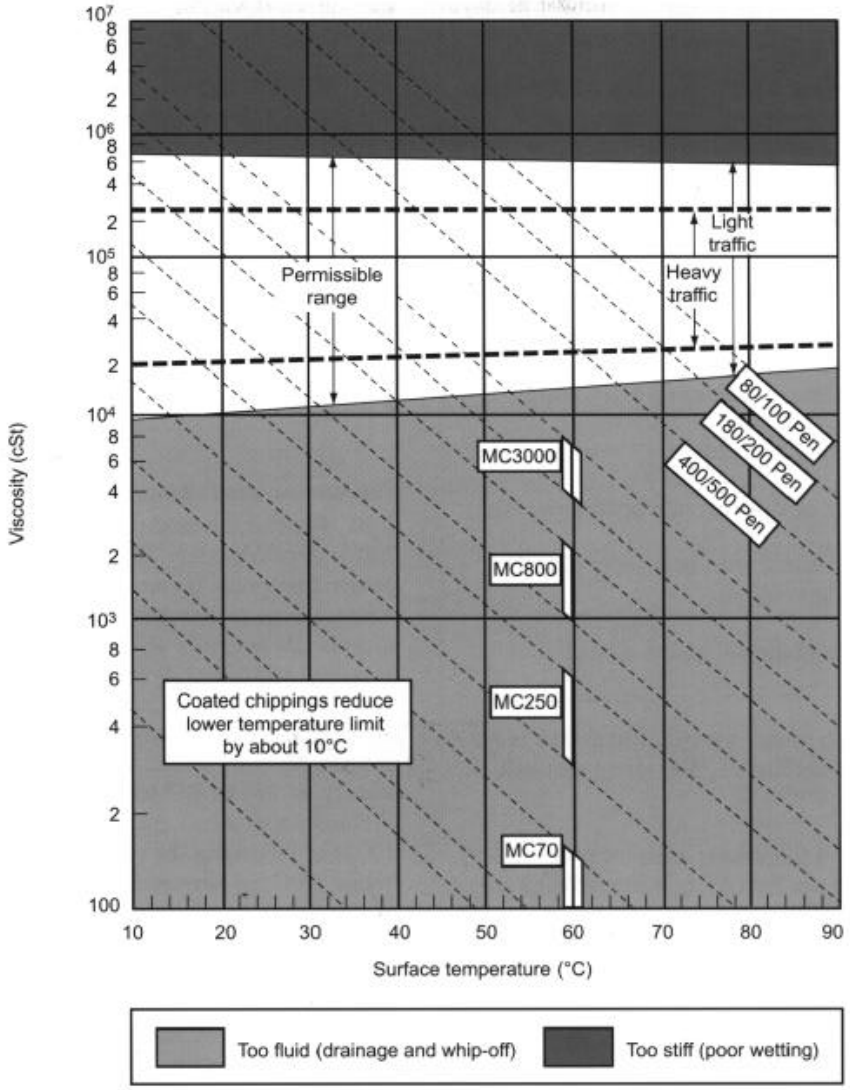

4.2.5 Bitumen Spray Rate used in Surface Dressings

The quantity of binder used to bond the chippings to the road surface depends on the average thickness of the single layer of chippings. When the chippings are rolled or trafficked they move and tend to rotate until the vertical thickness of the chippings is their smallest dimension.

The amount of bitumen sprayed on the road must be adequate to bind the chippings to the road surface, by coating the bottom of the chippings and being squeezed up between them. If too much bitumen is applied, it will rise up to the top of the chippings when the road is trafficked and cause the surfacing to bleed.

Therefore the vertical thickness of the chippings, or the least dimension, is the main factor controlling the amount of bitumen that should be sprayed on the road. The estimation of the Average Least Dimension (ALD) of the chippings is described in Section 1.1.1. Other parameters affecting the bitumen application rate include:

- The total traffic.

- The condition of the existing surface.
- Climatic conditions at the site.
- The type of chippings used.

These four parameters are assigned positive and negative values, as shown in Table 12. These four values are then combined to give an overall weighting factor, F.

If the existing surface of the road is rough then it should be selected as 'very lean bituminous'. Similarly, the primary layer of surfacing of a double surface dressing should be considered as 'very lean bituminous' for the purpose of calculating the spray rate for the second layer.

If it is noted that the level of commercial traffic on a road is high, for example greater than 20%, then the design traffic level selected should be that of the next higher category rather than that indicated by the traffic volume count.

Table 12: Weighting factors for surface dressing design

Description	Factor	
Total traffic (all classes)	Vehicles/lane/day	
Very Light	0 – 50	+3
Light	50 – 250	+1
Medium	250 – 500	0
Medium-heavy	500 – 1500	-1
Heavy	1500 – 3000	-3
Very Heavy	3000+	-5
Existing Surface		
Untreated or primed base	+6	
Very lean bituminous	+4	
Lean bituminous	0	
Average bituminous	-1	
Very rich bituminous	-3	
Climatic Conditions		
Wet and cold	+2	
Tropical (wet and hot)	+1	
Temperate	0	
Semi-arid (hot and dry)	-1	
Arid (very dry and very hot)	-2	
Type of chippings		
Round/dusty	+2	
Cubical	0	
Flaky	-2	
Pre-coated	-2	

The factor F and the ALD are used to determine the basic bitumen application rate, R, from Figure 19, which assumes that the bitumen used is MC 3000. If the chippings are pre-coated, the value of -2 should be added to the value used for the Type of Chipping parameter.

Figure 19: Surface Dressing Design Chart

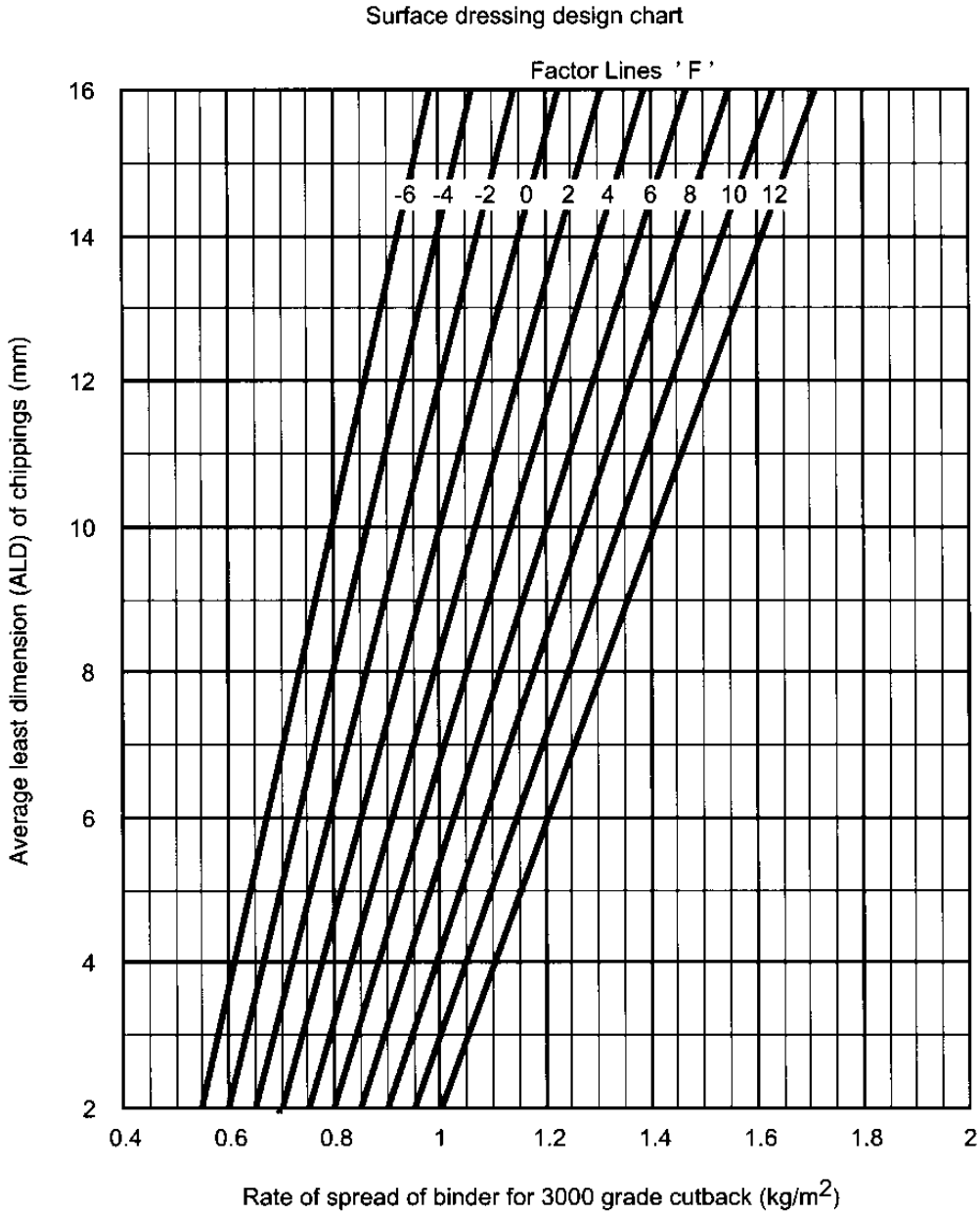

For roads in tropical and sub-tropical countries, the application rate should be further modified for the following conditions:

- For slow moving traffic or uphill gradients steeper than 3%, the spray rate is decreased by up to 10%.
- For fast moving traffic or downhill gradients steeper than 3%, the spay rate is increased by up to 10%.

Figure 19 gives spray rates applicable to MC 3000. The spray rates are modified when emulsions or penetration grade bitumens are used. The full range of modification factors for the spray rate R are given in Table 13.

The spray rates on roads with light traffic should be increased in accordance with the traffic level and the ALD of the chippings, as shown in Table 13.

Table 13: Typical bitumen spray rate adjustment factors

Binder grade	Basic spray rate from Figure 7 or equation 1	Flat terrain, moderate traffic speeds	High speed traffic, down-hill grades > 3%	Low speed traffic, up-hill grades > 3%
MC 3000	R	R	R*1.1	R*0.9
300 pen	R	R*0.95	R~1.05	R*0.86
80/100 pen	R	R*0.9	R*0.99	R*0.81
Emulsion[1]	R	R*(90/%binder)	R*(99/%binder)	R*(81/%binder)

[1] '%binder' is the percentage of binder in the emulsion.

Table 14: Suggested maximum increases in bitumen spray rate for LVRs

Suggested maximum increases in spray rate for low volume roads						
ALD of chippings (mm)	3		6		>6	
All traffic (vehicles/lane/day)	<20	20-100	<20	20-100	<20	20-100
Increase in bitumen spray rate (per cent)	15	10	20	15	30	20

4.3 Otta Seals

The design used for Otta seals is empirical and trial sections should be constructed to check that the design selected is satisfactory. The binders normally suitable for Otta seals in Africa are MC 3000 or 150/200 penetration grade bitumen but they are dependent on the quality of the aggregate used. In cool weather with temperatures below 10 °C at night, MC 800 or 150/200 penetration grade bitumen cut back with kerosene, should be used.

The hot rate of spray usually lies within the range from 1.6 to 2.1 l/m^2 but detailed adjustments should be made in accordance with the recommendations made in the NPRA (1999) Guide to the use of Otta Seals[7].

Gradings for aggregates are listed in Table 15. The strength requirements of aggregate are higher if the traffic is greater than 100 vehicles per day, as shown in Table 16.

A sand seal can be placed on top of the Otta seal if required. MC 800 or 150/200 pen, cut back with kerosene, is used. The sand is then spread on the top and rolled.

[7] Overby, Guide to the Use of Otta seals, Publication no. 93, Norwegian Public Roads Administration, 1999

Table 15: Otta seal aggregate grading requirements

Material Properties	Requirements	AASHTO or BS Test designation
Plasticity index	Max 10	T 90 – 61
Flakiness index	Max 30 (Applies only for crushed material)	BS 812
Sieve sizes, mm	**Overall grading requirements, % passing**	
19	100	T 146- 49
16	80 – 100	
13.2	52 – 100	
9.5	36 – 98	
6.7	20 – 80	
4.75	10 – 70	
2.00	0 – 48	
1.18	0 – 38	
0.425	0 – 25	
0.075	0 – 10	

Table 16: Otta seal aggregate strength requirements

Adequate strength requirements	Vehicles per day at the time of construction		BS Test designation
	< 100	> 100	
Min. dry 10% FACT	90kN	110kN	BS 812
Min. Wet/Dry strength ratio	0.60	0.75	

Table 17 to Table 23 illustrate the design procedure for Otta seals. Traffic is expressed in these tables as Annual average daily traffic (AADT).

Table 17: Recommended type of Otta seal in relation to traffic levels

Traffic levels and type of work	Type Otta Seal
Temporary seal (diversions, haul roads, temporary accesses, etc.).	Single Otta Seal
Maintenance resealing (all traffic classes to which sprayed surfacings are applicable.	Double Otta Seal
AADT less than 500	Single Otta Seal + sand cover seal
AADT more than 500	Double Otta Seal

Table 18: Preferred aggregate grading for Otta seals

AADT	Best suited grading
Less than 100	Open
100-1000	Medium
More than 1000	Dense

Table 19: Alternative grading envelopes

Sieve sizes (mm)	Open grading (% passing)	Medium grading (% passing)	Dense grading (% passing)
19	100	100	100
16	80-100	84-100	93-100
13.2	52-82	68-94	84-100
9.5	36-58	44-73	70-98
6.7	20-40	29-54	54-80
4.75	10-30	19-42	44-70
2.00	0-8	3-18	20-48
1.18	0-5	1-14	15-38
0.425	0-2	0-6	7-25
0.075	0-1	0-2	3-10

Table 20: Choice of bitumen in relation to traffic and grading

AADT at the time of construction	Type of bitumen		
	Open grading	Medium grading	Dense grading
More than 1000	Not applicable	150/200 pen grade	MC 3000 MC 800 in cold weather
100 to 1000	150/200 pen grade	150/200 pen grade in cold weather	MC 3000 MC 800 in cold weather
Less than 100	150/200 pen grade	MC 3000	MC 800

Note: Otta seals are usually more appropriate for roads with AADT less than 1000.

Table 21: Making cut back bitumen on site

The cut back bitumen grades can be made by blending 80/100 pen grade on site using the following proportions:	
To make 150/200 pen. grade:	3 - 5% softener mixed with 95 - 97 % 80/100 pen grade. Softener can be a purpose-made petroleum distillate, alternatively engine oil, old or new. In addition 3% points of power paraffin shall be used.
The cut back bitumen grades can be made by blending 150 /200 pen grade on site using the following proportions:	
To make MC 3000:	5 - 8% power paraffin mixed with 92 - 95% 150/200 pen grade.
To make MC 800:	15-18 power paraffin mixed with 82 - 85% 150/200 pen grade.

80/100 pen grade bitumen shall NEVER be used in Otta Seals unless softened or cut back to meet the viscosity requirements. Circulation in the tank shall be carried out for at least 1 hour after mixing. See Sections 6.1.3 and 6.3.2 for safety precautions.

Table 22: Hot bitumen spray rates for un-primed base course (l/m^2)

Type of Otta seal		Grading			
		Open	Medium	Dense	
				AADT < 100	AADT > 100
Double	1st layer	1.6	1.7	1.8	1.7
	2nd layer *	1.5	1.6	2.0	1.9
Single, with a sand cover seal	Fine sand	0.7	0.7		0.6
	Crusher dust or course river sand	0.9	0.8		0.7
	1st layer *	1.6	1.7	2.0	1.9
Single *		1.7	1.8	2.0	1.9
Maintenance reseal (single)		1.5	1.6	1.8	1.7

* On a primed base course the spray rate shall be reduced by 0.2 l/m^2 in the first layer.

Where the aggregate has a water absorbency of more than 2%, the bitumen spray rate shall be increased by 0.3 l/m^2.

Binder for sand cover seal shall be MC 3000 for crusher dust or coarse river sand, MC 800 for fine sand.

Table 23: Aggregate application rates

Type of seal	Aggregate spread rates (m^3/m^2)		
	Open grading	Medium grading	Dense grading
Otta seal	0.013 – 0.016	0.013 – 0.016	0.013 – 0.020
Sand cover seal	0.010 – 0.012		

In practice, the aggregate application rates will very often be increased in order to reduce the risk of bleeding.

4.4 Slurry Seals

4.4.1 Selection of Bitumen for Slurry Seals

Stable grade anionic and cationic emulsions are used to make slurry mixes if they are being laid by hand. An emulsion that breaks more rapidly can be used if the slurry is being laid using a purpose built machine.

If the crusher dust used in the slurry comes from acidic rocks a cationic emulsion is preferred.

4.4.2 Selection of Crusher Dust for Slurry Seals

Grading specifications for the crusher dust are shown in Table 24. This table shows gradings for fine, normal and coarse slurries.

Natural sands should not be used to manufacture slurries because they usually have low stability. Coarse slurries are used prior to resurfacing to fill depressions and ruts in the surface of roads, removing irregularities and improving drainage; they are also used if a slurry seal is constructed on a new pavement. General slurries are used for resurfacing roads carrying a light traffic volume, and fine slurries are preferred for the single or double slurry layer used in Cape seals. Fine slurries can also be used to obtain texture uniformity before resealing.

Table 24: Aggregate particle size distribution for slurry seals

BS test sieve (mm)	Percentage by mass of total aggregate passing test sieve		
	Fine	General	Coarse
10	-	100	100
5	100	90-100	70-90
2.36	90-100	65-90	45-70
1.18	65-90	45-70	28-50
0.6	40-60	30-50	19-34
0.3	25-42	18-30	12-25
0.15	15-30	10-21	7-18
0.075	10-20	5-15	5-15
Bitumen content (percent by mass of dry aggregate)	10-16	7.5-13.5	6.5-12.0

The design mix recommended for slurries by the Transport Research Laboratory (TRL) is as follows:

- Crusher dust - 0.69 x mixer volume (litres)
- Emulsion - 0.17 x mixer volume (litres)
- Water - 0.11 x mixer volume (litres)
- Cement - 0.02 x mixer volume (litres)

4.5 Cape Seals

A Cape seal consists of a single surface dressing, which is penetrated with a binder followed by a slurry seal applied to the top. As the first layer of a Cape seal is a single surface dressing, the application rates for bitumen and chippings are selected using the single surface dressing design procedure. Further guidance is provided in Section 6.10.

There is justification for using an emulsion for the first seal as emulsion is required for the slurry to be placed on top of the first seal; but the two operations are completely separate and the use of hot bitumen for the first layer and emulsion for the slurry causes no practical difficulties. Also, It is important to note that emulsion is more expensive than 80/100 pen bitumen or MC 3000 in terms of the residual bitumen in each.

A Cape seal is normally constructed with 14 mm chippings in the first layer and a single layer of fine slurry on top, or with 20 mm chippings in the first layer and two layers of fine slurry. Chippings that are suitable for surface dressing are suitable for the first layer in a Cape seal, and the grading for fine slurries, shown in Table 24, is applicable to the slurry applied to the top of the first layer.

The coverage given by the slurry when 20 mm chippings are used in the first layer should be 130 to 170 m^2/m^3. The coverage given by the slurry when 14 mm chippings are used in the first layer is 170 to 240 m^2/m^3.

4.6 Sand Seals

Sand seals are not recommended as initial seals for which high levels of traffic are experienced. However a number of examples exist where a reseal or texture treatment can be subjected to high levels of traffic. This usually correlates to a coarse grading (4.75-2 mm) with low dust content.

It is not possible to design a sand seal by the same procedure used for a surface dressing. In a sand seal the particles of sand become submerged in the binder film, and the net result is a thin layer of sand-binder mixture adhering to the road surface. The sand should be clean and coarse, with grading requirements taken from TRH 3 shown in Table 25.

Table 25: Gradings for sand used in a sand seal

Sieve Size (mm)	Percentage passing Sieve by Mass
4.75	100
2.36	0 – 100
1.18	0 – 50
0.6	0 – 20
0.3	0 – 10
0.15	0 – 5
0.075	0 – 2
Sand Equivalent (%)	35

Binder should be applied at a rate of 1.1 – 1.3 l/m^2 for penetration grades, and 1.2 – 1.4 l/m^2 for cut back bitumen and 1.4 – 1.6 l/m^2 for emulsions. Following this the sand is applied at a rate between 100 and 200 m^2/m^3.

5 PRICING

5.1 Overview

Quantities of materials required for works are estimated using generic application rates before tendering and ordering is carried out. In the case of a double surface dressing, the application rates for each layer of binder and each size of chipping can be used to calculate the cost of each seal separately. It is important to note that prices for materials fluctuate from year to year and in some cases even more frequently. Up to date prices must be used when estimating costs. The transport costs of the materials must also be taken into account.

The costs of equipment contribute significantly to the overall cost of a thin bituminous surfacing operation, and this can also vary with fluctuating fuel costs. Equipment costs also depend on whether the contractor has his own equipment or whether it is hired. A contractor experienced in surface dressing will probably own his equipment and in these circumstances hire charges will not be incurred. It is, however, essential for a contractor who owns equipment to be aware of its working life and annual utilisation, as well as the depreciation in the value of the equipment over time. As with any capital investment, the equipment owner should allow for finance or opportunity costs for using the capital deployed in the equipment purchase. Normally these costs are included in the owner's or contractor's overheads.

Labour costs also form a substantial part of the overall job costs. If the construction methods used are largely mechanical there will be less labour required on site, however skilled operators will be required.

Contingencies must also be accounted for in the price estimation. Allowance must be made for unforeseen circumstances such as: delays; corrective work; damage to the works, equipment or injuries to site personnel; faulty materials; wastage of materials; and late payments. Depending on the reliability of delivery and availability of materials, the contractor's experience and the conditions of the site, a contingency of 5 to 10% should be added to the total cost of the thin bituminous surfacing work.

As discussed in Section 1, preparatory work is normally required before a thin bituminous surfacing can be placed on an existing road. Investigations of the preparatory work required on an existing roadbase can reveal significant additional costs that will need to be met in a surfacing operation.

Overhead costs include the general running costs of a project such as salaries, electricity, water, accommodation for site personnel and site offices. Other overheads that will affect the costs of operations include the cost of finance, insurance, VAT and operational overheads.

5.2 Pricing of Thin Bituminous Surfacings in Ethiopia

Prices are not always consistent across Ethiopia and fluctuations can be seen across different jobs. For example, the unit rate for priming bitumen was 14.10 ETB in the Ziway – Butajira – Gubre Road project, 15.00 ETB in the Modjo Road Routine Maintenance project and 20 ETB in the Addis – Modjo – Hawassa Maintenance project.

Items that must be considered in the pricing of thin bituminous surfacing operations include priming, bitumen, chippings, fog sprays and variations in application rates. It is also important to note that thin bituminous surfacings are often part of a wider maintenance or road construction project and therefore additional works such as grading, patching, pothole repair, bush clearing, preparation of road bases, culvert and ditch cleaning, shoulder rehabilitation and concrete repairs and road marking are priced alongside surfacing works. Additional preparatory work is often required before an effective surface dressing can be carried out.

Changes in the Ethiopian Birr exchange rate will have a substantial effect on the costs of all imported materials and equipment. It is important either to consider price adjustment clauses in the contract, or to carefully assess recent and possible future movements in the foreign exchange rate.

5.3 Pricing Database

In Ethiopia, as in many developing countries, there is no standard official pricing database publication that gives unit rates for all materials, labour and equipment costs in terms of unit rates[8]. A pricing database such as this would need to be updated annually so that fluctuations in prices are taken into account, as well as inflation.

This kind of pricing database can be used to formulate a detailed costing of the work required using Bills of Quantities (BoQ). The BoQ will show all the detailed site costs including materials, equipment and labour for each activity. The costs of preliminaries, mobilisation, overheads and profit are also calculated. These cost factors can be itemised separately or shown across all items on the BoQ.

5.4 Life Cycle Costing

When costing for the whole life of a thin bituminous surfacing, it is important to note that thin bituminous surfacings are just one part of the overall maintenance required on a road. There are many other costs that must be met in the lifetime maintenance of a road.

If thin bituminous surfacings are properly constructed they will reduce the lifetime maintenance requirements of a pavement structure and the need for repairs, thus reducing the whole life costs.

If a thin bituminous surfacing is well constructed then it will not incur undue additional costs over its lifetime. A successful thin bituminous surfacing will also greatly reduce the whole life costs of a pavement structure by reducing the amount of moisture in the upper pavement layers and thus reducing the need for costly structural repair.

The length of service life that can be achieved with a thin bituminous surfacing depends on the traffic volumes on the road. It also depends on the design being appropriate and the construction being carried out in accordance with the specification and recognised good practice. The service life of the surfacing also depends on maintenance capability. Sand seals and slurry seals typically have a shorter service life than a single surface dressing, which in turn will give a shorter service life than a double surface dressing. A double surface dressing typically will also last longer than a Cape seal. An Otta seal will give

[8] Petts, Costing of Roadworks, LCS Working Paper No 3, 2002

greater service life when combined with a sand seal, and even further service life if a double Otta seal is used.

Further guidance on costing is contained in *Costing of Roadworks, LCS Working Paper No 3* (Petts, 2002).

6 CONSTRUCTION OF THIN BITUMINOUS SURFACINGS

6.1 Scope

This section illustrates the stages involved in the construction of thin bituminous surfacings, as well as the equipment and materials used. The selection of materials used in thin bituminous surfacings is detailed in Section 4.

6.2 Base Preparation

Before a thin bituminous surfacing is constructed, it is essential that any necessary repairs to the surface and underlying pavement structure have been carried out, as described in Section 8. A thin bituminous surfacing will fail if it is constructed on a base that is not sound.

The surface must be cleaned of deleterious material before a surfacing is applied. All dust and other loose material must be removed by manual or mechanical brooming, air jets or washing. If it is a new road base a light spray of water should be applied to the base before a prime is applied, in order to dampen any remaining dust.

6.3 Materials

Stockpiles of chippings, crusher dust, gravel, sand and any other required materials should be prepared in advance of the commencement of the surfacing operation. The required quantity of bitumen should be properly stored in tanks. Maximum storage temperatures for bitumen are shown in Table 26.

Table 26: Storage temperatures for bitumen

Type of binder	Maximum storage temperature	
	Up to 24 hours	Over 24 hours
80/100 pen. grade bitumen	175	125
MC 3000	155	100
MC 30	50	Ambient

Bitumen emulsions can be stored in drums at ambient temperature provided they are regularly rotated to prevent coagulation of the emulsion. Grades of bitumen that are solid at ambient temperatures should not be heated from cold in a distributor, as the bitumen cannot be circulated and the bitumen around the burner pipes will become overheated.

If the bitumen distributor has not been completely emptied at the end of the working day, the bitumen should be drained from the distributor and pumped into the storage tank, which should be maintained at a temperature less than the maximum shown above. Bitumen pumped from the storage tank into the distributor should preferably be at a temperature slightly higher than the spraying temperature for the particular grade of bitumen; but the bitumen should not be stored at a temperature above the long term storage value.

Alternatively, the temperature in the distributor can be allowed to drop to the storage temperature and then maintained at that temperature until required for the surface dressing.

The distributor is only effective in making small changes to the temperature of heated bitumen or in maintaining the temperature of the bitumen placed in it.

6.3.1 Penetration Grade Bitumen

Penetration grade bitumen must meet the specification shown in Table 27.

Table 27: Specification for penetration grade bitumen

	80 – 100		120 – 150	
	Min	Max	Min	Max
Penetration (100g/5 seconds)	80	100	120	150
Flash point (°C)	232		218	
Ductility, 25 °C, 5cm/minute	100		100	
Solubility (trichloroethylene)	99		99	
TFOT – loss on heating		1%		1.3%
TFOT – penetration of residue	50%		46%	
Ductility of residue	75		100	

6.3.2 Cut Back Bitumen

Cut back bitumen must meet the specification shown in Table 28.

Table 28: Specification for MC 3000

	MC 3000	
	Min	Max
Furol viscosity (82.2 °C in seconds)	300	600
Flash point (°C)	66	
Water		0.2%
Distillation test to 225 °C		
Distillation test to 260 °C	0%	15%
Distillation test to 315 °C	15%	75%
Distillation test to 360 °C	100%	100%
Residue penetration (25 °C, 100g/5 seconds)	120%	250%
Residue ductility (cm)	100%	
Residue solubility (trichloroethylene)	99%	

Cut back binders should only be made in a tank with heaters, a circulating pump, accurate temperature control and trained staff equipped with appropriate Personal Protective Equipment (PPE). A cut back binder can alternatively be made in the distributor if the same conditions are provided. The maximum temperature of the bitumen must be limited to 140 °C and all burners must be turned off while cutter is being added. Measured quantities of cutter, kerosene or diesel, must be pumped in beneath the surface of the bitumen. **Under no circumstances can the cutter be added through the manhole of the tank**. The mixture must be circulated until the cutter is thoroughly mixed with the bitumen, usually taking forty five minutes to one hour.

6.3.3 Bitumen Emulsions

There are many different emulsions in terms of the charge on the bitumen droplets, bitumen content and setting time, all with differing specifications. Emulsions can also be modified by the addition of latex rubber but this operation must be carried out in a purpose built plant. The most important tests that should be carried out on bitumen emulsions are:

- Saybolt Furol viscosity.
- Storage stability.
- Coating ability.
- Distillation and tests on the residue.

6.3.4 Chippings

Grading requirements for chippings, as well as the additional requirements that chippings must meet, are shown in Section 4.2.2.

6.4 Equipment

Most thin bituminous surfacings may be constructed using a range of technology options from heavy equipment, through Intermediate Technology Equipment (ITE) to labour based methods. The choice of equipment for thin bituminous surfacing operations should be based on the following factors:

- Thin bituminous surfacing type.
- Construction or maintenance.
- Scale of works.
- Equipment type/size available.
- Skills and labour resources available.
- Costs of viable options.

The most important consideration is that the trained personnel should be able to operate the available equipment to produce a surfacing which meets the requirements of the Specifications and Contract. Of particular importance is the need to spread the materials at the pre-determined rates. Special clauses may be required to be included in the pre-qualification documents for Contractors and the Bidding and Contract documents to allow specific technology and equipment options to be used.

All equipment and devices should be in proper working order with all bitumen appliances cleaned after each day's work to be ready for the next. Bitumen distributors must be equipped with an accurate temperature gauge and a slow speed speedometer. Constant pressure machines must have pressure gauges on the spray bar and constant volume machines must have proper control of the speed of the engine operating the pump. All distributors must be calibrated to ensure that the binder can be uniformly applied to the surface of the road at the correct application rate.

Table 29 summarises the technology and equipment options for the various operations involved in thin bituminous surfacing works.

Table 29: Equipment options for thin bituminous surfacings

Operation	Equipment Options	Comments
Road base compaction and preparation	Various	Preparatory work, according to Specifications
Chipping Production	Crushing Plant*	Suitable for large scale works
	Mini-crusher*	Suitable for small scale new and maintenance works
	Mobile crusher*	Suitable for small scale new and maintenance works
	Manually crushed*	Suitable for small scale new and maintenance works
Loading Chippings /Aggregates	Front End loader	Suitable for large scale works
	Tractor with loader bucket attachment	Suitable for all works
	Manually loaded	Suitable for small scale new and maintenance works
Transporting Chippings /Aggregates	Truck	Suitable for all works
	Tractor and trailer	Suitable for small scale new and maintenance works
	Animal cart	Suitable for small scale new and maintenance works
Watering	Truck mounted bowser	Suitable for large scale works
	Towed bowser	Suitable for small scale new and maintenance works
	Watering cans	Manually applied water with sprinkler attachments
Prime or Seal Binder Application	Truck mounted bitumen heater-distributor	Suitable for large scale works
	Tractor mounted heater-distributor	Suitable for small scale new and maintenance works
	Towed heater-distributor	Suitable for small scale new and maintenance works
	Hand lance	Suitable for small scale new and maintenance works
	Manually applied	Suitable for small scale new and maintenance works. Use containers of known volume for pre-marked areas.
Chipping Application	Self-propelled chipper	Suitable for large scale works
	Pushed metering chipper	Suitable for large scale works
	Tailgate chipper	Suitable for large scale works
	Manually operated chipper	Suitable for small scale new and maintenance works
	Manually applied	Suitable for small scale new and maintenance works
Rolling	Self Propelled PTR**	Suitable for large scale works

Operation	Equipment Options	Comments
Chippings/Sand	Towed PTR**	Suitable for small scale new and maintenance works
	Steel wheel roller <8t and without vibration	Suitable for small or large scale new and maintenance works. However, ensure chippings are not crushed
Sweeping excess chippings	Tractor/vehicle mounted /towed mechanical broom	Suitable for large scale works
	Manual brooms	Suitable for small scale new and maintenance works
Rolling Otta seal	PTRs** > 12t plus deadweight 10t steel wheel roller	PTR 'kneads' the aggregate into the bitumen and finish with the steel wheeled roller
Mixing Slurry	Slurry Mixer	Suitable for large scale works
	Concrete mixer	Suitable for small scale new and maintenance works
Spreading Slurry	Sledge	Suitable for large scale works
	Manual Squeegees	Suitable for small scale new and maintenance works

Notes:
* Suitable screening arrangements required to achieve Specification requirements
** PTR: Pneumatic Tyred Roller
Large scale works are typical main road construction and maintenance contracts.
The large equipment may be used for small scale works, but the unit costs can be expected to be higher.

6.4.1 Bitumen Distributor

The success of a thin bituminous surfacing operation depends on the accurate calibration of the distributor and the proper training of the operator to apply a uniform application of bitumen at a required spray rate. The distributor must also be capable of spraying a large enough area to comply with the programme of operations.

It is important that the distributor's speed measuring device is working properly to achieve the correct and uniform distribution of bitumen.

Emulsion sprays can be applied by hand for small scale works. Containers of known volume can be used to manually spread bitumen, such as a perforated bucket or watering can. The area for each can should be marked with chalk on the road according to the required rate of spread. Labour can quickly develop the skill to spread the emulsion evenly over the fixed area but, for reasons of safety, this method should not be used for heated bitumen.

The use of the hand lance is an alternative manual method of uniformly distributing heated or emulsified bitumen. However, considerable skill is required to achieve an acceptable and consistent rate of spread. Use of hand methods is only suitable for minor works and small scale operations; any larger scale work requires the use of a mechanical bulk binder distributor.

There are two types of mechanical bitumen distributor, the constant volume distributor and the constant pressure machine.

6.4.2 Constant Volume Distributor

Constant volume distributors are fitted with positive displacement pumps, the output of which can be pre-set. All the binder delivered by the pump is fed to the spray bar when spraying is in progress and there is no by-pass arrangement for re-circulating binder to the tank. For a spray bar of given length and output, the rate of spread of binder on the road is inversely proportional to the forward road speed of the distributor. This type of machine is very common in developing countries.

The calibration of a constant volume distributor involves three inter-related variables: the pump output, the road speed and the spray bar width. Hence, calibration procedures can be extensive, particularly if the spray bar width is required to vary for different lane widths. The mechanical complexity of these machines means that they are only suitable for highly skilled operatives.

6.4.3 Constant Pressure Distributor

In a constant pressure distributor a pump delivers binder to the spray bar at a pre-set pressure. It is fitted with a relief valve to regulate the pressure and permit binder to bypass the spray bar and return to the tank. Re-calibration is not required when spray bar extensions are fitted or the number of nozzles is reduced; the pressure in the spray bar is not affected by the number of nozzles in use. A pressure gauge that registers the pressure during spraying is fitted to the spray bar. Some machines also include a temperature gauge fitted to the spray bar. The Depot Spray Test should be used to check the transverse distribution across the spray bar at least once a year, as described in Section 3.5. Alternatively, the Bakkie test should be carried out for every distributor that arrives on site, or every time the binder is changed.

The rate of spread of bitumen varies inversely with the road speed of the distributor, as with constant volume machines. Figure 20 shows a constant pressure distributor manufactured in the UK. Most distributors from the UK are constant pressure machines, whereas most from the USA are constant volume.

Figure 20: Bitumen distributor

6.4.4 Spray Bars

Nozzles are positioned on the spray bar so that their sprays overlap on the ground in order to minimise the effects of small variations in the output of individual nozzles. Some adverse effects will occur if the height of the spray bar above the road is incorrect. If a double overlap is used the spray fan from every second nozzle should just touch. If a triple overlay is used the spray fan from every third nozzle should just touch. There will be striping in the surfacing if the spray bar height is incorrectly set.

As the outer parts of the sprays from the nozzles at each end of the spray bar do not overlap with an adjacent spray, the spray rate at the ends of the spray bar is less than along the length. Therefore adjacent spray runs of the distributor should be overlapped.

Before a spraying run is carried out, the spray bar and nozzles should be preheated by circulating hot binder and the nozzles should be operated for a few seconds, to ensure they are operating freely. At the end of a work day or when the tank is being refilled, the binder pump should be opened to air and the feed line to the spray bar, the spray bar itself, and the return line back to the tank emptied. The return valve should then be closed and the nozzles blown out with air. If the distributor is being allowed to cool completely, the binder pump should be flushed with diesel fuel.

There are two basic types of nozzles: slotted nozzles and whirling spray nozzles. Slotted nozzles spray the bitumen in a thin, fan-shaped film, at a high output. It is more critical to maintain the correct spray bar height above the ground with slotted nozzle than with whirling nozzles. The slots need to be set at an angle of 15 to 30° to permit the correct overlap on the ground of spray from adjacent nozzles, as shown in Figure 22. The road speed of the distributor is higher when using slotted nozzles compared to whirling nozzles, because they have a higher rate of delivery. The larger orifices in slotted nozzles also make them less likely to become blocked.

Higher spraying temperatures are necessary when using whirling nozzles and the swirl chamber is enclosed in the spray bar so that the nozzles can be pre-heated effectively by circulating hot binder through the spray bar prior to spraying. The fine spray given by whirling nozzles is in the shape of a hollow cone. A hood and canvas curtains are fitted to the spray bar as shown in Figure 21, to prevent the spray being deflected by wind. This protection is not necessary with slotted nozzles; although caution should be exercised where wind speed is approaching 30 km/hr. Slotted nozzles should not be used where the wind speed is above 30 km/hr, if no wind protection to the spray is provided.

Figure 21: A bitumen distributor using swirling nozzles

Figure 22 shows the correct alignment of slotted nozzles at 15 to 30°, in order to avoid adjacent spray fans from touching and causing striping.

Figure 22: Correct alignment of spray nozzles

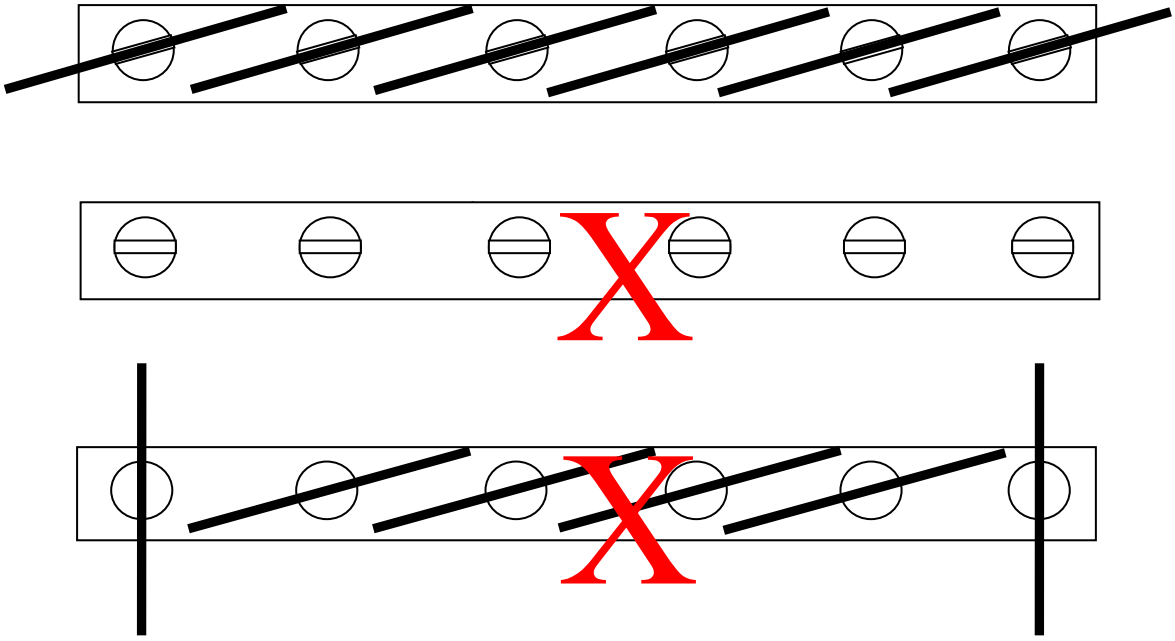

Figure 23 and Figure 24 illustrate the importance of the correct spray bar height above the road.

Figure 23: Spray bar height adjustment – double overlap

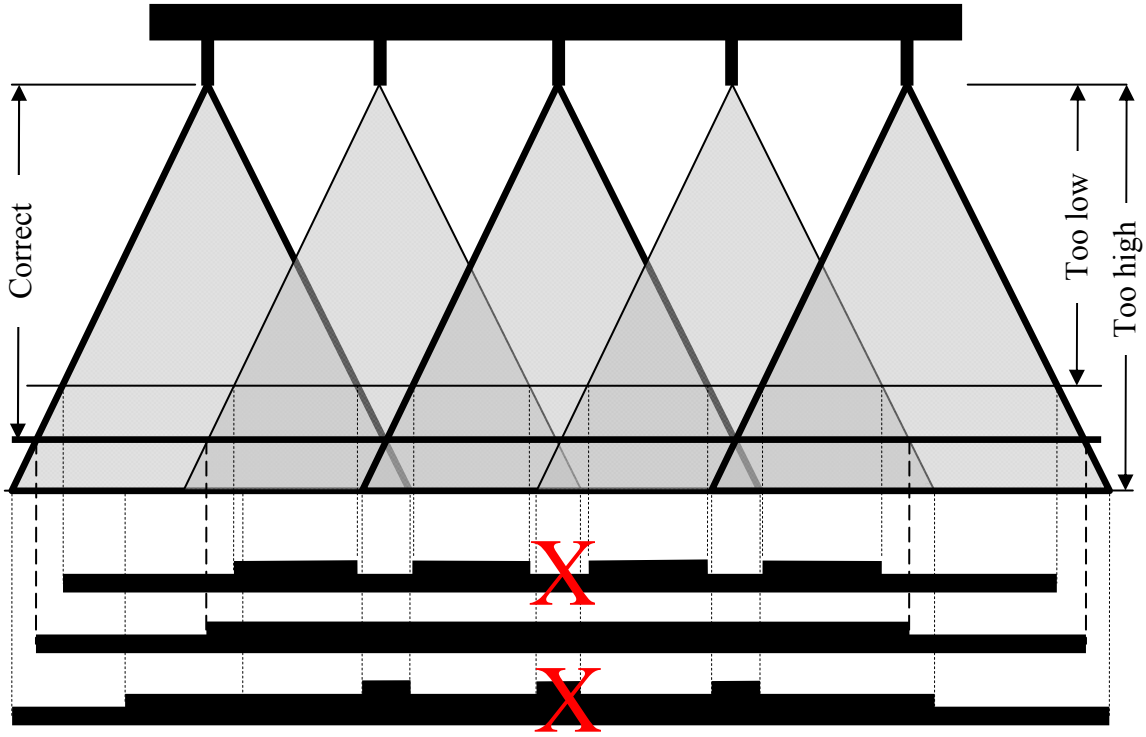

Figure 24: Spray bar height adjustment – triple overlap

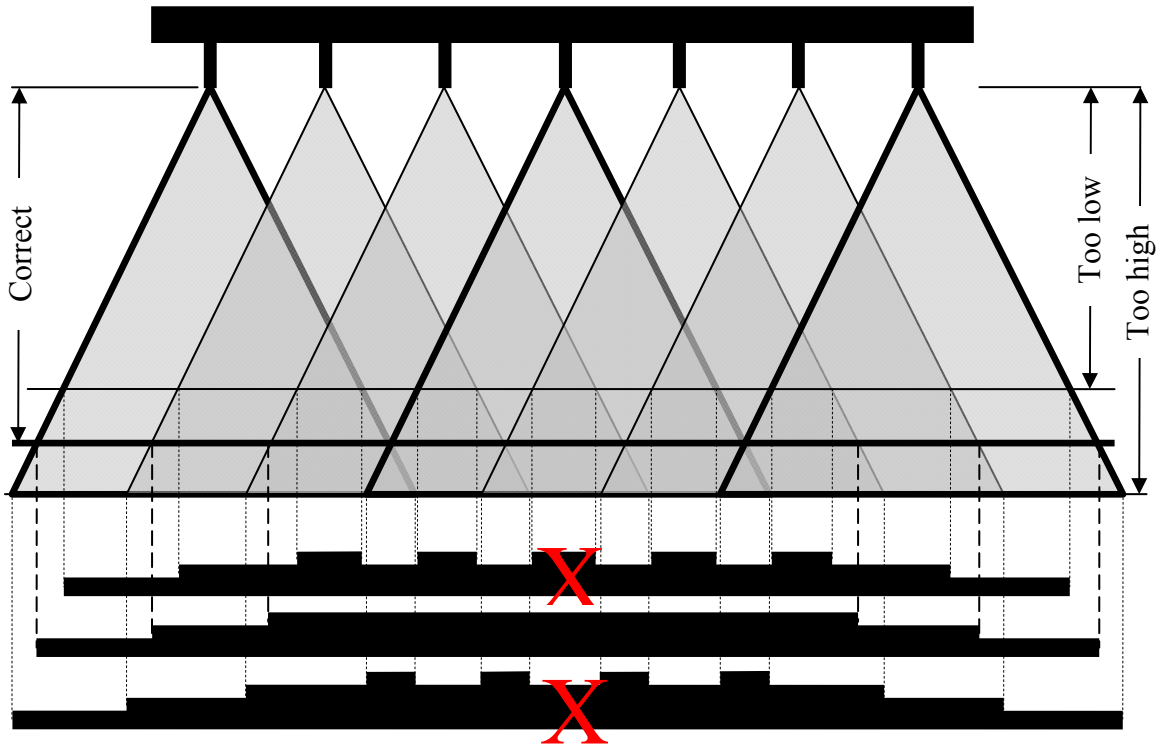

Figure 25 and Figure 26 illustrate the necessary spray and chipping overlaps between adjacent lanes.

Figure 25: Spray and chippings overlap – double overlap

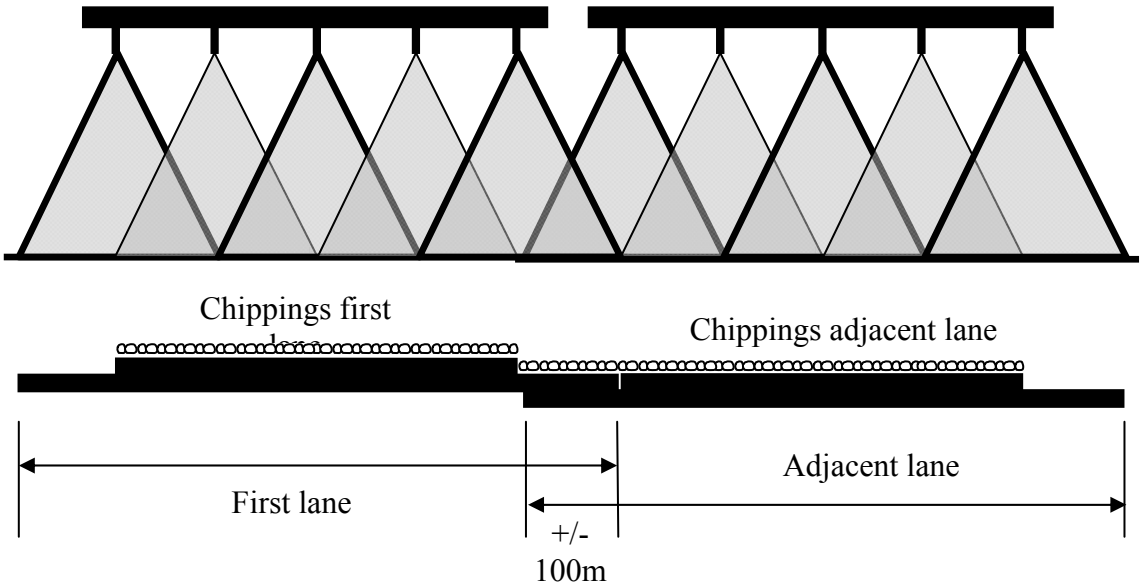

Figure 26: Spray and chippings overlap – triple overlap

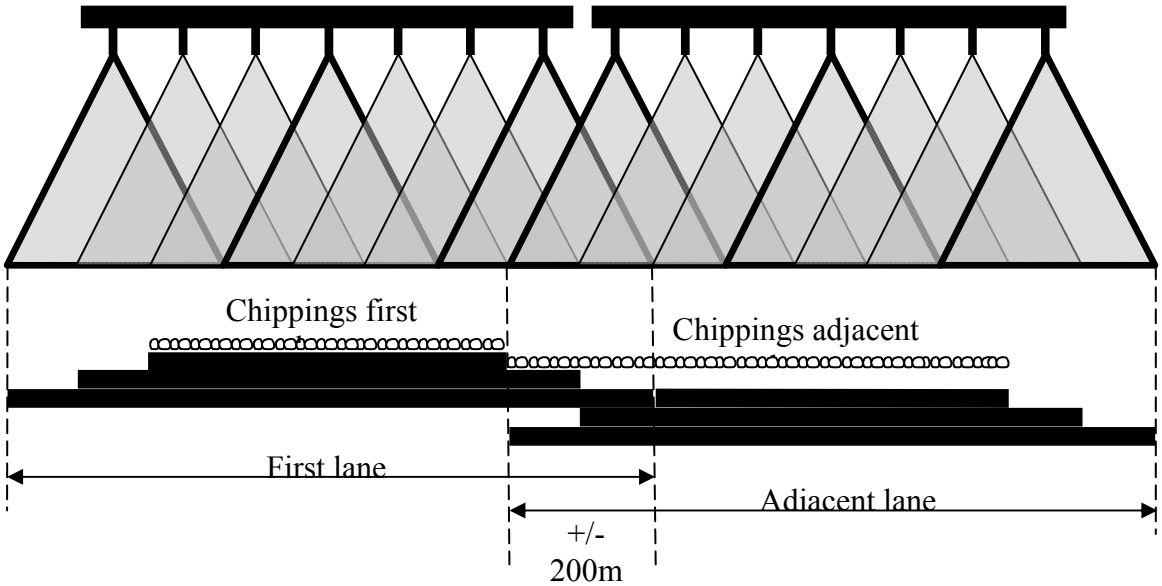

Figure 27 illustrates an inadequate output from the spray bar. This can be caused by low pumping pressure, incorrect viscosity of the binder, the binder being cold or an incorrect pumping speed.

Figure 27: Poor flair

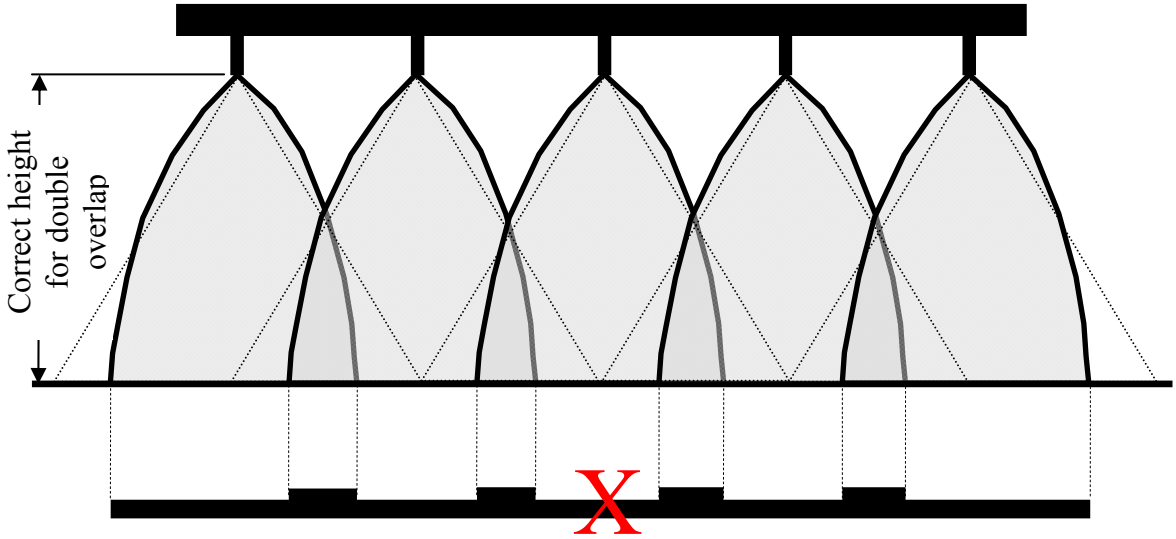

Each type of binder must be sprayed at the appropriate temperature, as shown in Table 30.

Table 30: Binder spraying temperature

	Whirling spray nozzles		Slotted nozzles	
Cutback grades	Min °C	Max °C	Min °C	Max °C
MC 30	50	60	40	50
RC/MC 70	65	80	55	70
RC/MC 250	95	115	80	90
RC/MC 800	115	135	105	115
RC/MC 3000	135	150	120	130
Penetration grades				
400/500	160	170	140	150
280/320	165	175	150	160
150/200	170	190	155	165
80/100	180	200	165	175

6.4.5 Pumping the Binder

In most bitumen distributors the binder pump is usually driven by a separate engine and is usually located within the tank so that it is kept hot by the surrounding bitumen. The drive from the engine to the clutch is usually through a pump, and the same engine usually powers a small air compressor, supplying air and fuel under pressure to the burners.

A capacity between 500 and 16,000 litres is usually provided by the tank, which is invariably made from steel. The bitumen is heated by flues fitted with burners that run through the tank. A thermometer is fitted to the tank to indicate the temperature of the

bitumen. The burners use either kerosene or diesel. The heating of the binder should mainly be carried out with a bitumen heater separate from the distributor. The burners in the distributor tank should only be used to make small adjustments to the bitumen temperature. The bitumen in the tank should be circulated for as long as the burners are lit, to ensure the bitumen is not unevenly heated. Circulation also aids heat transfer through the bitumen.

6.4.6 Calibration of the Distributor

Before a spraying operation is carried out the bitumen distributor must be properly calibrated to ensure that the correct spray rate and spray bar height are used. Distributors are fitted with a low range speedometer so that the road speed can be accurately measured at low speeds. A calibration chart or 'Driver's chart' indicates the required road speeds and pump outputs for the range of spray rates. This chart should be provided with all bitumen distributors.

Only the required road speed need be read from the calibration chart to give a specified spray rate if using a constant pressure distributor, whereas both the required pump output and the required road speed must be read from the calibration chart for a constant volume machine.

If a calibration chart is not provided with a bitumen distributor, then the machine must be calibrated. Once the rate of bitumen spray from the spray bar has been found using stationary tests as described in Section 3.5 and Section 3.6, the required distributor speed for a particular rate of application to the road surface can be calculated from the following equation:

$$\textit{Road speed of distributor} = S/(R*W)$$

Where S is the rate of delivery (mass) from the spray bar in kg/s
R is the design spray rate (mass) in kg/m²
W is the sprayed width in metres

A longitudinal motion test should also be carried out as part of the calibration of the distributor, in order to check the spray rate. Four or five weighed metal trays of known area (e.g. 0.3 m x 0.3 m), are placed in the path of the distributor as it sprays at a constant speed. The trays are then weighed and the rate of spread of bitumen is calculated. This is repeated with different trial road speeds so that the rate of spread/road speed chart can be drawn up. This test should be periodically repeated during surface dressing operations to check the consistency of the spray rate.

6.4.7 Chipping Spreaders

Chippings should preferably be applied mechanically rather than by hand in order to give consistent and uniform rates of spread. For small scale works chippings may be spread by hand.

The main types of chipping spreader are:

- Metering or non-metering 'tail-board' types.
- Pushed metering chip spreaders.
- Self-propelled metering or non metering chip spreaders.

- Manually operated chipping spreaders.

None of these machines can provide a pre-determined rate of spread; they simply give an even distribution of chippings. The construction team must ensure that an adequate application of chippings is maintained.

If using a tail-board chip spreader, metering devices can be applied in order to reduce dependence on the skill of the lorry driver. The chippings can be delivered over a roller which is driven from the road wheels of the lorry, or from a fifth wheel attached to the chip spreader. Thus variations in the road speed of the tipper produce corresponding variations in the rate of discharge of the chippings.

Figure 28: A tail-board chipping spreader

Pushed metering chip spreaders operate in a similar manner to metering tail board chip spreaders with the exception that the metering roll is located at the base of a wheeled hopper. A reversing tipper lorry pushes this type of chip spreader along the road and the chippings in the hopper are replenished from the tipper.

Self-propelled chipping spreaders, shown in Figure 29, are the most effective machines available for spreading chippings onto the road surface. The chip spreader tows the delivering tipper lorry in reverse using a quick release mechanism and chippings are discharged from the tipper into a hopper. Conveyor belts transfer the chippings to a transverse hopper at the front of the machine. A metering roll at the bottom of the transverse hopper then delivers the chippings to the road surface. There are also non-metering self-propelled chip spreaders that rely on gravity to deliver the chippings. They must be operated carefully in order to ensure that a constant road speed is maintained.

Manually operated chip spreaders are suitable for small scale works. Hand application of chippings is also acceptable for small scale works if the labour is trained and properly supervised to achieve acceptably consistent rates of chipping application.

Figure 29: Self-propelled chipping spreader

6.4.8 Rollers

Rolling of the chippings after they are applied to the road is an essential part of the surface dressing process. It helps to orientate the chippings so that their largest surface is embedded in the bitumen, which helps to ensure retention of the chippings.

A Pneumatic Tyred Roller (PTR) has the advantage of the moulding action given by the tyres, which manoeuvres the chippings into a tight mosaic without splitting them. In a PTR, the tyres in the front axle are aligned with the gaps in the rear axle to give complete coverage over the width of the roller, as shown in Figure 31. The specified weight per wheel in the ERA specification is 2 tons. The maximum allowable tyre pressure is 600 kPa, and the pressure in each wheel should not differ by more than 35 kPa[9].

Steel wheeled rollers weighing in excess of 8 t should not be used for this process due to the risk of crushing the chippings. Rollers of this type tend to 'bridge' depressions in the road surface and the chippings in the depressions are not rolled. Weaker and poorly shaped chippings also tend to be cracked by steel rollers.

Otta seals require PTRs of at least 12 t weight to 'knead' the aggregate into the bitumen layer. The work can then be finished with a smooth steel wheeled roller of 10 t dead weight. Sufficient rolling is essential for Otta seals to perform correctly, see Section6.6.

Sand seals should be rolled as many times as possible so that the bitumen squeezes up through the sand. Traffic or a PTR can be used to compact slurry seals, which can be opened to light traffic after the emulsion breaks and starts to dry out.

[9]ERA Specification 2002 Series 6000 Bituminous Surfacings and Roadbases.

Figure 30: Steel wheeled roller

Figure 31: A PTR

6.4.9 Bitumen Heater

A bitumen heater is used to increase the temperature of bulk stocks of bitumen when a surfacing operation is undertaken, or to maintain stocks below the maximum storage temperature. A distributor is very inefficient for raising the temperature of bitumen so this should be avoided wherever possible. If a distributor is left with binder at the end of the day, and the next morning the pump cannot circulate it, the burners will have to be used to heat the cold bitumen. It must then be dumped off site as soon as it can be pumped. For small scale works towed heater-distributors may be used.

Figure 32: Towed bitumen heater-distributor

6.4.10 Other Necessary Equipment

Front-end loaders are required mainly for handling the chippings and loading them into the tipper lorry at the stockpile. They are also useful for tasks such as lifting bitumen barrels onto decanters and for general lifting duties. Front-end loaders can be self propelled or fitted to tractors or diggers.

A mechanical broom should preferably be used to clean the road surface of dust and other debris, as the results are considerably better than those from the use of manual brooms. A motorised air blower can also be used to clean the road surface before carrying out a thin bituminous surfacing.

A drag broom should be used to remove excess chippings, once a layer has been applied and rolled.

Where a prime coat is required in a thin bituminous surfacing, it is useful to spray the road surface lightly with water before the prime coat is sprayed, helping to suppress dust on the road. This also allows the prime coat of bitumen to spread more easily on the surface and to penetrate. The most effective method of carrying out this operation is to use a towed or self propelled water bowser. Manual watering is acceptable for small scale works.

Other equipment that is used in the construction of thin bituminous surfacings includes temporary road warning signs, fuel for operating plant, hand tools such as wheelbarrows, shovels, watering cans, hammers and chisels, cleaning materials for plant and personnel, first aid kits, fire extinguishers, walking type distance measuring devices, 'Rotatherm' type thermometers and reinforced paper for constructing neat joints.

Various types of equipment are shown in Appendix A.

6.5 Surface Dressing

6.5.1 Applying the Prime Coat

Prime coats are used when the surface dressing is to be applied to a new road base. A prime provides a sound surface to which binder can bond. It also binds and strengthens the

top of the base and protects it from light traffic if the construction of the surfacing is delayed for a short time.

Before a crushed stone base is primed all dust and other debris must be swept off from the surface to expose a mosaic of aggregate to which the prime will bond. This may not be appropriate for some natural gravel bases. The road base must be sound and dry and the surface should be lightly sprayed with water to settle any remaining dust. Any structural repairs that are required must be carried out before the prime coat is applied.

MC 30 should normally be used to prime the base of a road, but MC 70 may be used if the base is porous. The penetration of the prime should be tested on a small trial section before the main application is carried out. Invert emulsion can also be used for priming. The prime coat should penetrate 4 to 10 mm. No traffic should be allowed onto a primed surface until the prime has completely dried. If the prime penetrates too quickly the cause should be determined. Usually one will find either the base has been inadequately compacted or the prime is too fluid for the base material. If excess prime is applied, sand can be used to soak it up before traffic is allowed on the surface. The sand is removed once it has soaked up the excess prime.

Traffic may be allowed onto a primed surface for a limited period after it has dried. This will show up any defects in the base course or layer which has been primed. Such defects may then be immediately rectified, at less cost than would otherwise be the case.

Figure 33: Application of a prime coat

6.5.2 Double Surface Dressing

After the application of the prime coat, the construction of a double surface dressing is carried out in the following stages:

1 Clean the primed surface.
2 Check that the binder and aggregate are of adequate quality and meet the specification.
3 Apply first spray of binder at the correct spraying temperature and correct spray rate, as determined in the design. This should be done at least 24 hours after the

application of the prime coat. The prime should be dull and dry before the first spray of binder is applied.

4 Apply first layer of aggregate at the spread rate specified in the design, ideally immediately following the application of binder. If emulsion binder is used, the chippings must be applied before the binder begins to break, i.e. turn black. This only applies to emulsions. A shovel can be used to apply additional chippings by hand to any areas where the application rate is too low. Care must be taken not to add excess aggregate.
5 Roll the first layer of chippings immediately after application using a 20 ton ballasted PTR. The entire surface area should be covered at least three times with the PTR. This operation rotates the chippings so the least dimension is vertical and embeds the chippings into the bitumen.
6 Remove excess chippings from the first seal. Excess chippings will prevent the layer from lying flat, and prevent proper adhesion to the film of bitumen.
7 Apply the second spray of binder. If MC 3000 is used for the first seal the second seal should ideally be applied 2 to 3 weeks after the first seal has been applied. This enables the volatiles in the first spray of binder to evaporate and not be trapped by the second spray. However if penetration grade 80/100 bitumen is used, the second seal can be applied the day after the first seal.
8 Apply the second layer of aggregate immediately after the second layer of binder is applied.
9 Roll the second layer of chippings immediately after application using a PTR, so that the entire surface area is covered at least four times. According to the ERA specification, the entire surface area is then to be rolled at least twice using a steel wheeled roller, weighing between six and eight tons.

Only minor crushing of the aggregate is permissible whilst using the steel wheeled roller. If, in the opinion of the engineer, general crushing is occurring, the rolling must be stopped.

Once complete, traffic should not be allowed onto the new surfacing until the following morning. Traffic speeds on the road should be reduced for 2 to 3 days in order to allow the surface dressing to settle.

It is important that the bitumen distributor does not advance far ahead of the chip spreader, as this may curtail operations in the event of breakdown of the chip spreader.

Figure 34: Application of chippings immediately after the application of binder

6.6 Otta Seals

The first stage in constructing an Otta seal is to apply the fluid binder to the existing surface, which is usually a new road base. A prime coat may or may not be applied beforehand, and the existing surface may or may not be bituminous.

All-in crushed stone or natural gravel is then spread at a rate in accordance with the applicable design, depending on the grading of the material and the traffic level at the time of construction. This layer must then be rolled for a minimum of fifteen passes on the first day of construction. For the following two days the entire area of the Otta seal must be rolled for a minimum of fifteen passes per day. Two PTRs with a minimum weight of 12 tonnes should be used for the rolling operations. Other alternative rolling methods, such as trucks loaded with heavy sandbags, are acceptable.

The road may be opened to traffic after the first three days but the traffic speed must be limited to a maximum of 50 km/h for three weeks. It is beneficial if the traffic is channelled so that an even distribution of rolling is maintained across the road width. During the first three weeks, any material that is dislodged by traffic should be broomed back onto the exposed areas. After three weeks, all excess material should be broomed off the surfacing and speed restrictions can be lifted.

If natural gravel with a high percentage of fines has been used, it may be necessary to continue rolling the gravel for up to six weeks before removing excess material and speed restrictions. A team must be available to deal with areas of bleeding when required, and during the normal construction period as well as during the first hot season following the completion of sealing operations.

Additional layers of Otta seal or a sand seal should not be constructed for at least three months after the initial layer is placed, and the surface should be swept clean of excess material or dirt before any additional layers are constructed.

Figure 35: Rolling an Otta seal

It is a good indication that the bitumen application rate is correct when droplets of bitumen appear in the wheel tracks of the tipper trucks delivering the aggregates.

It is normal for an Otta Seal to exhibit slight bleeding in the wheel tracks after some time under traffic. The seal will be ruined if the bitumen application rate is reduced below the levels shown in Table 22 because the reduced bitumen content will then not be able to retain the coarse aggregates, resulting in a slippery surface.

Bleeding is corrected by application of fine or coarse sand until a satisfactory surface has been achieved. Figure 36 shows the typical appearance of an Otta seal four years after construction. Application of a sand cover seal would give a more uniform appearance.

Figure 36: Typical appearance of a single Otta seal after four years in service

6.7 Labour Based Methods of Otta Seal Construction

Some activities in Otta seal construction lend themselves to labour-based methods, including:

- Excavation and screening of as-dug natural gravel.
- Spreading of aggregates on the road.
- Brooming back dislodged aggregates.
- Blinding off bleeding areas with sand.

Aggregates can be placed in accurately measured heaps along the road and spread by labourers immediately after the bitumen has been applied, as shown in Figure 37. For a more uniform spread rate a pushed chip spreader "Chippie" can be used, as shown in Figure 38.

Figure 37: Spreading of aggregates by hand

Figure 38: Spreading aggregates with a Chippie

6.8 Sand Seals

The success of a sand seal depends on the quality of the finish of the base, which should be primed. The first application of binder should be applied at a nominal rate of 1.0 l/m^2 of residual bitumen.

If the binder is 80/100 pen or MC 3000 bitumen, the sand should be applied immediately after the binder has been sprayed so the binder can coat the sand. If cationic bitumen emulsion has been used the sand should be applied immediately after the emulsion has started to break. As soon as a complete layer has been placed, the sand should be rolled using a PTR between 6 and 10 tons. The entire sand surface should receive 4 passes of the roller. The road should then be opened to traffic. For 1 to 2 weeks after application, the sand is swept back towards the wheel paths to prevent the surface from bleeding. A second sand seal can be constructed after traffic has been allowed onto the first seal for approximately 3 months. Before constructing the second seal, all loose sand from the first seal should be removed and the steps above repeated.

Figure 39: Construction of a sand seal

6.9 Slurry Seals

Slurry is a homogenous mixture of fine aggregate, stable grade emulsion, water and filler (cement or lime). It is mixed in a concrete mixer to a creamy consistency. Consistency can be tested using the method in ASTM D3910 or Sabita Manual 28 Appendix A. Typical values for flow in different applications are shown in Table 31. If two layers of slurry are to be applied, the flow of the slurry for the second layer should be greater than that for the first.

Table 31: Consistency values of flow

Application	Flow
Slurry Bound Macadam	60 mm
Texture Treatment or Cape Seal	30 – 40 mm
Slurry Overlay	20 – 30 mm
Micro Surfacing	10 – 20 mm

Slurry mixtures can be produced manually or by machine. Manual methods are preferred in some places because the quality of the surfacing produced is superior to those produced by machine.

Prior to placing a slurry seal, the top of a new base must be primed and any loose material must be removed. Steel or wooden rails are placed along the edges of the area to be surfaced, so that the placing and thickness of the slurry layer can be controlled.

As shown in Section 4.4, the approximate mix proportions for a slurry seal are as follows:

- Crusher dust - 0.69 x mixer volume (litres)
- Emulsion - 0.17 x mixer volume (litres)
- Water - 0.11 x mixer volume (litres)
- Cement - 0.02 x mixer volume (litres)

Experimental small sections should be constructed on the road and trafficked in order to test the mix design, and any necessary adjustments made accordingly. Higher crusher dust content increases the percentage of emulsion required. In particularly hot weather, more water may be required to obtain the correct consistency. Emulsion content may also need to be adjusted according to traffic levels. Several different experimental slurries should be made with adjusted mix proportions, in order to find the optimum mix. The right slurry mixture will not exhibit plastic deformation after trafficking and will have a dark grey to black colour. A dull brown colour indicates that the binder content is too low. The Colas method of producing briquettes can be used to finalise the required emulsion content; for details of this method Sabita Manual 28 should be consulted.

Crusher dust should be used for slurries rather than natural sands, whose rounded particles often produce unstable mixtures. Stable grade cationic or anionic emulsion can be used.
The water used must not be excessively acidic or alkali. Water used with anionic emulsion should have a PH between 7 and 9; water used with cationic emulsion should have a PH between 4 and 7. Water that is fit for drinking is usually suitable for use with anionic or cationic emulsion. Excess water must be avoided.

The cement improves the consistency, the flow and the workability of the mix.

The construction of the slurry is carried out as follows:

- All necessary preparation of the road surface is carried out including the repair of defects and cleaning.
- The correct amount of dry aggregate is placed in the rotating concrete mixer, as shown in Figure 40.
- The cement is slowly added to the aggregate and thoroughly mixed.
- Some of the water is added.
- The emulsion is added slowly, to prevent splashing.
- The remaining water is carefully added, about 2 litres at a time.
- The mixture must be inspected after each addition of water, in order to check that the mixture has the correct, creamy consistency. Care must be taken not to add excess water.

- The mixture is carried to the location of application using wheel barrows as shown in Figure 41. The wheelbarrows should not be loaded more than half full.
- Shovels are used to take the slurry from the wheelbarrow and place it between the guide rails, as shown in Figure 42.
- The mix is spread between the guide rails with rubber squeegees. A spreader is worked back and forth across the rails to ensure the layer has a consistent depth.

The emulsion should normally be allowed to break for 2 to 3 hours, and the slurry layer allowed to dry out, before traffic is allowed onto it. However, this depends on humidity and temperature and should be determined by inspection. The second slurry layer can be applied on the first layer after traffic has been allowed onto the first layer for at least 24 hours.

The slurry should not be applied when the road surface temperature is below 7 °C, as colder weather affects the time taken by the emulsion to break and may cause segregation of the aggregate and movement of emulsion to the surface.

Figure 40: Mixing the slurry

Figure 41: Transporting the slurry to the location of application

Figure 42: Spreading the slurry using squeegees

6.10 Cape Seals

A Cape seal consists of a single surface dressing using 14 or 19 mm aggregate, which is penetrated with a binder followed by a slurry seal. If 19 mm aggregate is used, 2 layers of slurry are applied. The first layer of a Cape seal is designed and constructed using the same procedure used for a single surface dressing. A slurry seal is then prepared as described in Section 6.9, and applied to the top of the surface dressing.

Two applications of binder are made before the slurry is applied:

1. A hot binder or emulsion is used to form the tack coat. Hot binder is usually preferred as it is the most economical.
2. After the tack coat and layer of aggregate have been applied, the penetration coat is applied at a recommended rate of 1 l/m^2, consisting of equal parts water and 60% stable grade emulsion. This may be the same emulsion as used in the slurry mix. All loose aggregate should be broomed off before applying the penetration coat. In the case where heavy traffic is expected or there are steep grades with slow moving heavy vehicles, the tendency is to reduce the spray rate to 0.8 l/m^2 and to dilute the emulsion to 30% emulsion / 70% water (of 60% emulsion).

The slurry mixture that should be used for a Cape seal is as follows:

- 100 parts aggregate.
- 20 parts 60% stable grade emulsion
- 1 to 2 parts cement.
- Approximately 15 parts water.

This mixture should flow around the chippings in the surface dressing and not cover the chippings, so that the vehicle tyres come into direct contact with the chippings rather than the slurry. If it is intended that the slurry will flow over the chippings in the surface dressing and, therefore, come into direct contact with the vehicle tyres, a lower binder content should be used, similar to that used in an ordinary slurry seal.

6.11 Cold Mix Asphalt

The Cold Mix Asphalt was developed as an alternative surfacing option for application on labour-based projects. The advantages are that:

- The potential hazards of working with hot bitumen are avoided.
- It does not rely on heavy and complicated construction plant such as bitumen distributors, bitumen heaters, mechanical chip spreaders and pneumatic tyre rollers. It can be constructed entirely with hand tools, simple equipment and a pedestrian roller for compaction.
- It is suitable for low volume rural roads which are often in remote areas where it may be difficult to mobilize heavy construction plant.

The speed of the sealing operations can be made to closely match the speed of base construction, hence avoiding damages to the base before it is sealed, particularly where it is impossible or uneconomical to construct a by-pass.
The Cold Mix Asphalt can also be a useful supplement to conventional sealing operations on areas that are difficult to access with heavy machinery, such as bus stops and parking areas.

6.11.1 Aggregate Grading

Aggregate grading requirements are shown in Table 32 and Figure 43. The aggregates shall be continuously graded and within the specified grading envelope shown below. It is preferable to achieve a grading as close to the upper limit as possible.

Table 32: Grading requirements

Sieve aperture	Percentage passing %	
	Upper limit	Lower limit
14	100	100
10	100	85
6.3	85	65
4	70	45
2	50	24
1	33	12
0.425	18	6
0.3	14	4
0.15	8	1.5
0.075	5	1

Figure 43: Aggregate grading for cold mix asphalt

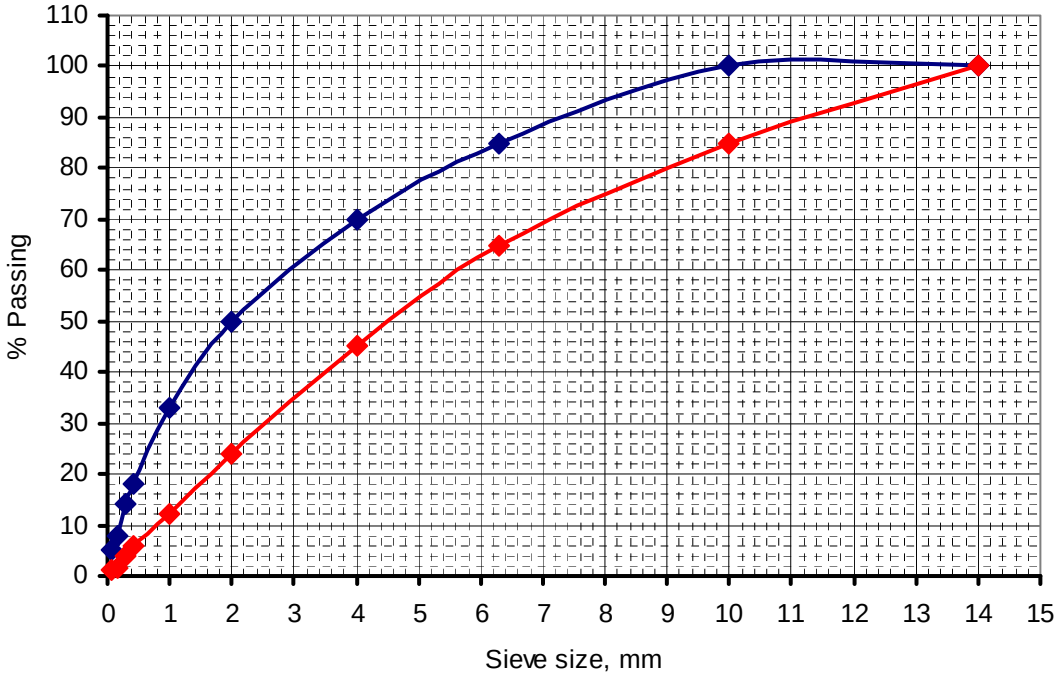

6.11.2 Aggregate Quality

The Cold Mix Asphalt emulates the Otta Seal, but emulsion is used instead of hot bitumen as a binder. The performance of the seal is more like an asphalt concrete than surface dressing and relies on bitumen bonding and particle interlock more than the strength of the aggregates. The aggregates specifications are therefore similar to the ones for the Otta seal.

The coarse aggregates (6/10 mm stone) shall meet the following minimum specification:

Table 33: Coarse Aggregate Specification

Aggregate strength requirements	AADT at time of construction		BS Test designation
	< 100	> 100	
Min Dry 10% FACT	90KN	110kN	BS 812
Min Wet/Dry strength ratio	0.60	0.75	

Maximum flakiness index is 30%.

6.11.3 Mix Proportions

For tendering purposes the mix proportions shown in Table 34 shall be used.

Table 34: Cold mix asphalt proportions

Material		Quantity
Maximum batch volume, l		40
Aggregates	6/10 stone	12
	0/6 crusher dust	28
	0/2 fine sand	3 (as directed by the Engineer, if required to obtain the required grading)
Emulsion, l	K3 65% cationic emulsion	6
Water, l		1 (when aggregates are dry)

6.11.4 Work Method

The mixing and laying of the Cold Mix Asphalt surfacing shall be done by labour using only hand tools and purpose made equipment. Compaction shall be done by double drum steel roller type Bomag 75 or similar.

Before the sealing operation starts, the base must be cleaned of all deleterious material, dust, animal droppings etc. The 20x20 mm guide rails are then fixed to the base in a suitably wide strip. It is recommended to limit the width of the strip to a maximum of 1.20 m.

A thin tack coat of 1:8 diluted A4 Anionic Stable Grade emulsion is then spread on the area between the guide rails using a watering can and soft brooms and allowed to set and dry before the mixing and placing of the asphalt commences.

Figure 44: Spreading emulsion

6.11.5 Mixing

The mixing is carried out in purpose made mixing trays as shown in Figures 45 and 46.

Figure 45: Mixing tray

Figure 46: Mixing tray dimensions

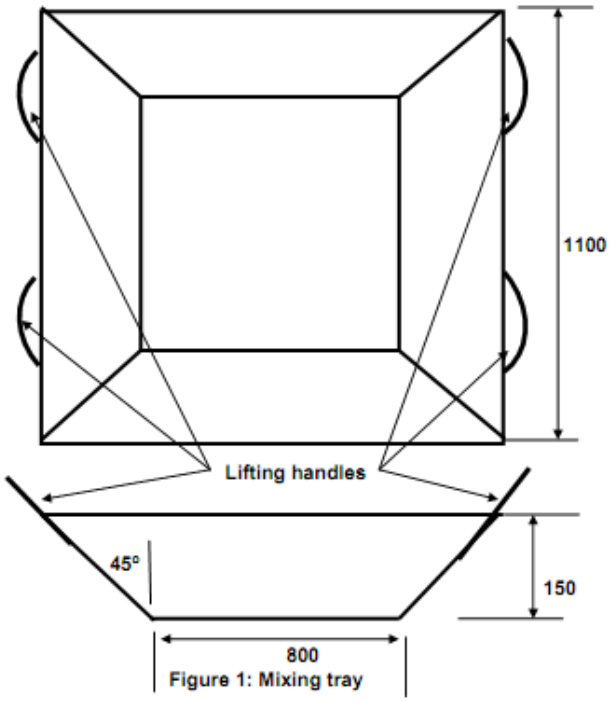

If the aggregates are dry, a small amount of water must be added and thoroughly mixed in before the emulsion is added.

The mixing must be done:

- thoroughly to ensure that all aggregates are coated with emulsion, and;
- swiftly, until the mix has the consistency of a thick soup.

The mixing is best done with square nosed spades to ensure that material in the corners of the tray is properly mixed with the rest.

Figure 47: Mixing cold mix asphalt

6.11.6 Placing and Levelling

When the mixing is completed, the mix must be placed quickly on the road in between the guide rails and levelled to the top of the guide rails before the emulsion starts to break (turn from brown to black), after which point the mix gets sticky and difficult to spread.

Figure 48: Placing the cold mix asphalt by spade

Figure 49: Levelling the cold mix asphalt

6.11.7 Compaction

Rolling can commence once the guide rails have been removed and the initial breaking of the asphalt has commenced for the full depth of the layer. This period will be affected by the ruling weather conditions, but can normally be done within ½ hour.

The first compaction is done with the roller in static mode. After 2-3 hours the final compaction is done with the roller in vibrating mode.
Rolling is continued until the 20 mm loose layer has been compacted to a thickness of approximately 14 mm.

Care must be taken when compacting the asphalt. Rolling of the asphalt should take place in the longitudinal direction of the road and wherever possible at least half the roller should be supported on compacted asphalt. Incorrect rolling can result in undulations in the surface of the asphalt.

Once rolling has been completed and before proceeding with the construction of adjacent asphalt strip, the edges of the compacted asphalt must be neatly trimmed and squared and any material resulting from this operation removed from the road surface.

Under normal circumstances, traffic can be allowed onto the newly constructed seal the next day. Care should however be taken with heavy vehicles turning on the fresh asphalt for the next few days.

6.11.8 Construction of the Adjacent Strip of Asphalt

The asphalt on the adjacent strip can now be constructed as previously described. In placing the asphalt on the adjacent section of the road, allowance must be made for the thickness (+/-14 mm) of the compacted asphalt already placed on the first section of the road.

This is achieved by placing a 6 mm mild steel flat bar on top of the compacted asphalt and 20 mm rails on the other edge of the strip as illustrated in Figure 50 and Figure 51.

Figure 50: Constructing the adjacent strip of asphalt

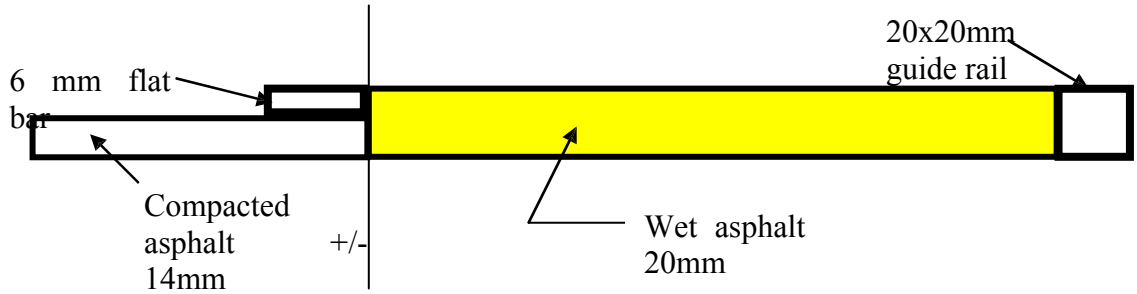

Figure 51: Adjacent strips of asphalt

6.11.9 Construction Joints

Longitudinal and transverse joint are potential weak spots in the asphalt surfacing. Extra care must therefore be taken to ensure tight joints and good bonding between the old and new asphalt.

All joints must be neatly trimmed and any foreign matter such as mud, dust and deleterious material must be removed before the new asphalt is laid against the joint. On joints against asphalt that has been constructed a day or more previously, emulsion must be applied on the joint surface with a soft brush.

After construction all joints must be inspected, and where there is a slight “gap” in the joint, a small amount of emulsion must be applied into the gap and crusher dust spread on top to properly seal the joint.

The joint shown in Figure 52 is badly constructed as it is too open, and requires emulsion and crusher dust to seal the joint. The joint shown in Figure 53 is barely visible.

Figure 52: A poorly constructed joint

Figure 53: A well constructed joint

6.12 Fog Sprays

A fog spray consists of cationic or anionic emulsions and is particularly important when a 20 mm single surface dressing is constructed or when a new surface dressing has to be opened to normal traffic within a few hours. Spray grade cationic emulsion is preferred to lock the aggregate and ensure the shoulder to shoulder contact. This can also be undiluted. No rolling is carried out after the fog spray is applied.

A fog spray is a 1:1 blend of 60% cationic emulsion and water sprayed at 0.8 to 1.0 litres/m²; but never less than 0.8 litres/m².

Figure 54: Fog spray applied to a single surface dressing

6.13 Safety

The handling and application of bituminous binders is a hazardous operation. There is a significant risk of fire and toxic fumes, which may cause extensive damage to equipment and injury to site personnel. Suitable training of the personnel handling bituminous binders is essential. Suitable fire extinguishers must be provided and readily accessible during all operations involving the handling, transportation, storage or heating of bituminous binders. Smoking must be prohibited.

6.13.1 Personal Protective Equipment

Personnel must be provided with appropriate PPE, including heat-resistant gauntlet gloves and facemasks when a spray lance is used due to the possible rupture of the armoured hose[10].

The following PPE should be provided to site personnel at all times:

- Hand gloves if there is risk of hand contact with hot bitumen.
- Helmets.
- Safety boots.
- High visibility jackets, as shown in Figure 55.
- Protective overalls.
- Goggles, a face shield or other face protection if handling hot bitumen.
- Respiratory equipment if exposure to fumes is likely.

[10] ERA, Standard Technical Specification - 2002 Series 6000: Bituminous Surfacings and Road Bases

Figure 55: High visibility jackets

6.13.2 Safety and Fire Fighting Equipment

Suitable fire fighting equipment for dealing with bitumen fires must be provided at the site of surfacing operations. Water must not be used to extinguish a bitumen fire, as bitumen will react violently with it. Appropriate extinguishing media for a bitumen fire includes foam, carbon dioxide, dry chemicals or water fog.

Containers exposed to intense heat from fires should be cooled with water to prevent vapor pressure build-up, which could result in container rupture. Containers exposed directly to flames should be cooled with large quantities of water.

Smoking must be prohibited in the vicinity of hot bitumen due to the risk of ignition.

6.13.3 First Aid

Any victim of a burn or other serious injury should be evacuated to a medical centre immediately rather than be treated on site. However, suitable first-aid equipment for dealing with bitumen burns must be provided on site. Recommendations are provided in the Sabita Manual 8 Bitumen Safety Handbook. In the case of a burn injury from hot bitumen falling onto exposed skin, cooling of the burn area should be carried out by applying cold water or an ice pack. Firmly adhering bitumen should not be removed from the skin; it must either be allowed to fall off gradually or it may be removed by warm medicinal paraffin. A standard bandage must not be applied to burnt skin, as this will stick to the burnt area.

If eyes are affected they should be washed for fifteen minutes. In the case of ingested bitumen, vomiting must not be induced. If vomiting is unavoidable, breathing should be monitored. In the case of inhalation of bituminous fumes, the victim must be moved to an uncontaminated area. Trained personnel should administer artificial respiration if breathing stops, or CPR if the heart stops. In all cases of direct exposure to hot bitumen or bitumen fumes, medical attention must be sought immediately.

6.13.4 Handling Bitumen

Overheating of bitumen may lead to a fire hazard and produce bituminous fumes that are hazardous to health. The bitumen tank must be cleaned by diesel and flushed when

changing from emulsion to hot binder. The presence of water in excess of 0.2% in bitumen may cause frothing during heating, which may lead to overflow of bitumen.

Decanters should be allowed to drain completely and any accumulation of coke and general debris must be removed. Bitumen distributors and storage tanks must not be flushed by means of splash filling with petroleum products, and the flushing hose should be inserted in the bottom of the tank. The bitumen decanter should contain only enough material for one day of work, with sufficient space provided for expansion of bitumen. The decanter should be covered at all times. Rainwater must not be allowed to enter the decanter.

Binder should be pumped into the distributor from the decanter or preheating tank at a temperature equal to or just above the spraying temperature. The distributor burners should only be used for small increments of binder temperature. The burners must not be operated during the spraying operation, while the distributor is in motion, or when binder is less than 150 mm above the top of the flues.In the case of manual handling of hot bitumen, buckets should never be filled to the brim due to the risk of spillage or splashing.

6.13.5 Traffic Safety

Due to the risk from traffic adjacent to the works, measures must be taken to warn and protect both road users and the road workers. Road signs must be placed on both sides of the road works in order to warn traffic coming from both directions of obstruction ahead. The warning signs should alert traffic to the presence of men working, a closed lane, loose chippings and speed restrictions at the site. These signs must be placed ahead of the road works to give advance warning of the danger to traffic, along the length of the road works to protect the site from traffic, and at the end of the road works in order to indicate that there is no further restriction to traffic. Traffic cones should be used to mark the boundary of the work site, as shown in Figure 56.

Traffic control measures are necessary if there is only one lane remaining open so that only one vehicle can pass the work site at a time. Either a temporary traffic light system should be used, or a traffic operator using a reversible ‘stop/go’ sign.

Figure 56: Traffic cones used as a control measure

7 QUALITY CONTROL

One of the most critical aspects to the success of a surfacing is effective quality control. Lack of quality control during construction is often the reason for failure in a surfacing, rather than defective design.

7.1 Construction Practices

A critical element to the success of a surfacing is to ensure that the bitumen distributor is spraying evenly across the spray bar, and that it is spraying at the correct rate. Unsuccessful surfacing will result if the spray rate is too high or too low. Correct functioning and spraying of the bitumen distributor, including calibration and procedures for checking spray rates, is described in Sections 6.4.4, 6.4.5 and 6.4.6. Approval and acceptance of the surfacing work can be divided into the following steps:

- Approval of the bitumen and aggregate supplied.
- Approval of aggregate pre-coating, if applicable.
- Approval of prime coating, if applicable.
- Checking and approval of binder spread rates.
- Checking and approval of aggregate spread rates.
- Approval of brooming and rolling.
- Approval of the string lining of the road and handling of joints, transverse and longitudinal.

7.1.1 Bitumen Distributor

The following items should be checked before commencing construction:

- The machine is not leaking oil, fuel or bitumen.
- All dials and gauges are clean and can be easily read.
- The nozzles are correctly set.
- The required calibration has been carried out and spray rates have been checked.
- All nozzles are clean and are not blocked.
- The distributor does not start at zero speed at the beginning of the spraying area: it should start 4 to 5 metres before the start of the spraying area.
- Reinforced paper is being used to form neat joints at the start and end of the spraying area.

7.1.2 Self-Propelled Chipping Spreader

The following items should be checked before commencing construction:

- The rollers of the distribution bins and the support bearings to the roller drum are in good condition.
- The conveyor belts are in good condition.
- The gates of the bins are uniformly and correctly adjusted so as to give even distribution of chippings.
- The sieve in front of the roller on the distribution box is in place and adjusted to ensure that clean aggregate initially falls onto the binder and that any dust present falls on top of the aggregate.

A dry run should be carried out with the chipping spreader to ensure that the distribution is even and to the correct application rate.

7.1.3 Rollers

The following checks should be made before construction begins:

- At least 2 PTRs are available; light steel wheeled rollers are also required if double surface dressing or Cape seals are to be constructed.
- There is no spillage or leaks of any kind from the equipment.
- Tyre shapes and sizes are uniform, and only tyres manufactured for the purpose are in use; tyres are in good condition.
- The tyre pressures are correct and uniform.
- Tyre scrapers and spray nozzles for wetting the tyres are in good condition.

7.2 Material Specifications

The standards that bitumen and aggregates must meet are described in Section 4 and Section 6.3. See Appendix B for further details of the aggregate and bitumen laboratory tests used to determine the properties of materials.

7.2.1 Aggregates

The following tests should be carried out for aggregates:

- Sieve analysis.
- Determination of ALD.
- Measurement of flakiness index.
- Determination of PSV.
- Hardness tests (ACV, AIV, LAA).
- Adhesion to bitumen.
- Test for deleterious substances.

Sampling and testing should be carried out systematically as the material is delivered. The geology of the source rock should be established in order to determine the acidity and quartz content.

7.2.2 Bitumen

The following tests should be carried out for bitumen emulsions, at a frequency of 2 x 1l samples from each spray tanker:

- Water content.
- Saybolt Furol viscosity.

The following tests should be carried out for penetration grade bitumen, at a frequency of 3 x 1l samples from each delivery or from each spray tanker:

- Penetration at 25 °C.
- Ring and ball softening point.

The following tests should be carried out for cutback bitumen, at a frequency of 3 x 1l samples from each delivery or from each spray tanker:

- Viscosity.
- Distillation to 190, 225, 260 and 316 °C.
- Penetration.

7.2.3 Relaxation of Standards

The performance of a thin bituminous surfacing is highly dependent on the quality of construction. Experience has shown that the main causes of failure in thin bituminous surfacings are related to the construction processes rather than the design or climatic influences. It is for this reason that strict specifications for construction equipment, processes and material conformance have been developed[11].

High quality aggregates are becoming increasingly difficult to obtain, with increasing costs of haulage and crushing. If high quality aggregate is prohibitively expensive to obtain, slight relaxation of standards can be applied, provided that the surfacing is to be constructed on a lightly trafficked road. As the design of surfacings is based on the aggregate size, ALD and grading, the standards for these properties cannot be reduced. However, on lightly trafficked roads, requirements for crushing strength can be relaxed. Whereas a maximum ACV of 21 is preferred, satisfactory results can be achieved with an ACV of 30 on lightly trafficked roads, or as high as 40 on very lightly trafficked roads.

[11] Sabita. Manual 10 – Bituminous surfacings for low volume roads and temporary deviations, 2012.

8 MAINTENANCE

8.1 Definitions

Maintenance of roads is essential to ensure that they remain in a satisfactory condition over their design life. Effective maintenance will reduce the cost to road users and the roads will remain safe for users. Failure to carry out adequate maintenance at the right time can lead to premature deterioration of roads and costly reconstruction work. Inadequate maintenance will also increase costs to road users and reduce safety.

The decision regarding the maintenance methods that are to be used will depend on available resources, costs and policy. Operations are usually grouped according to funding and planning arrangements. Maintenance operations can be classified as routine or periodic.

Routine maintenance operations are those required at least once per year on a section of road. They are typically small scale or simple and widely dispersed, and can be carried out using skilled or unskilled labour. These operations can be planned and carried out on a regular basis.

Periodic maintenance operations are those occasionally required on a section of road after a number of years. They are usually large scale, requiring specialist equipment and a skilled work force. These operations are costly and require specific identification.

8.2 General Repairs

This includes all types of works on a road pavement and is usually localised and small scale. These small works are usually carried out as part of routine maintenance operations, but may also be done in advance of periodic maintenance. This work is usually carried out by a mobile gang and can include:

- Sanding.
- Local sealing.
- Crack sealing.
- Filling in depressions.
- Surface patching.
- Constructing or cleaning ditches and drainage outlets.
- Patching and reshaping of shoulders.

8.3 Structural Defects and Repair

There are a number of structural defects that can occur on a road such as rutting, potholes, edge break, longitudinal deformation and cracking. The first four of these defects are shown in Figure 59 to Figure 62. The condition of the existing road and the extent of defects must be assessed prior to repair works. Any structural defects within a pavement structure must be repaired before a thin bituminous surfacing can be carried out. A thin bituminous surfacing will not correct structural defects, and will not perform effectively unless the structural defects are corrected before the thin bituminous surfacing is applied. An assessment must be made on the extent of the following defects:

- Locations where pumping has occurred in the pavement.

- Areas of irregularities and rutting.
- Locations where there are potholes, base failures and edge break.
- Cracking in the road surface, the type of cracking, its severity and extent.
- The condition of patching that has previously been carried out.

If the problems are localised, they should be corrected and properly patched. If they are more general it may be more economical to rehabilitate the whole road or sections of it. Figure 57 and Figure 64 show defective patching. For several reasons neither of these two sections of road is suitable for receiving a thin bituminous surfacing. They should be reconstructed.

Inadequate drainage very often causes localised or more general structural failure in a pavement. If water is allowed to enter the road pavement and is prevented from quickly draining away, one or more of the pavement layers are likely to fail prematurely.

Similarly, if inadequate materials have been used in the pavement or if the construction techniques were faulty in a distressed section of pavement, a thin bituminous surfacing will do little or nothing to prevent further deterioration of the pavement which will fail prematurely. If the surfacing reduces the amount of water entering the pavement there may be a slower rate of failure, but it is unlikely that the water can be kept out indefinitely.

In all pavement repair work it is essential to determine the nature of the original construction so that a suitable repair method can be determined. The parameters that should be checked in the original construction include density, grading, flakiness, plasticity and soundness of the materials as well as the thickness of the pavement layers.

Once the assessment of defects has been carried out, and the layers in the pavement structure responsible for the failure as well as the causes of the failures have been identified, a suitable repair programme must be prepared. If the failed area is greater than 15 to 20% of the road surface, it is usually more economical to completely reconstruct the pavement.

Figure 57: Defective patching

Figure 58: A recently excavated distressed area requiring cleaning, priming and patching

Figure 59: Rutting

Figure 60: Potholes

Figure 61: Edge break

Figure 62: Failed section of road

The section of road shown in Figure 62 has a number of defects, including:

- Shear failure on the left hand side.
- Longitudinal deformation in the centre with potholes re-forming.

This section of road should be reconstructed before a new surface is applied.

Figure 63 shows an existing road that does not have adequate drainage. The water ponding at the side of the road is saturating the pavement layers and causing water to trickle out of the surface near the centreline. This water will continue to seep into the underlying pavement structure even if a new surfacing is placed on the road. The shoulder must be improved so all water will drain to the side ditch away from the pavement.

Figure 64 shows a section of road that has bad drainage, a recent patch that has failed in shear, deformation and cracking. Extensive repairs are required to this part of the road; it needs to be reconstructed and the drainage improved.

Figure 63: Poor drainage

Figure 64: Failed patch and poor drainage

8.3.1 Rutting

Ruts in the wheel path of vehicles and depressions in local areas can be caused by insufficient pavement strength to carry the traffic loads or inadequate stability of the bituminous surfacing materials. The rutting and depressions will grow rapidly if water is allowed to penetrate into the road, leading to cracking and break-up of the pavement.

Subsidence and rutting along the edge of the pavement can be caused by a number of factors. These include an inadequate shoulder, penetration of water into the pavement structure or foundation leading to a loss of bearing strength, poor drainage or a narrow carriageway. The subsidence can lead to rapid deterioration of the pavement edges during the rainy season.

Ruts that are smaller than 10 mm can be repaired by filling with fine asphalt or coarse slurry and restoration of the shoulder; but larger ruts and depressions require local restoration of the pavement structure. This repair will prevent water from ponding in ruts in the vehicle wheel paths and reducing the life of the pavement. Repair of ruts will also

prevent the binder draining into the ruts during the application of a thin bituminous surfacing. This can lead to bleeding.

8.3.2 Edge Break

Edge break is caused by wear of the shoulder and formation of a step, action of water, insufficient compaction of the edges or a road construction that is too narrow. If neglected, edge break can rapidly expand during the rainy season and requires local restoration of the pavement structure.

8.3.3 Potholes

Potholes are a common problem in roads and occur in locations where cracking, deformation or aggregate loss has taken place. Potholes can be caused by poor quality material used in the pavement construction, the ingress of water, breakaway of material under traffic, crazing or depressions. These holes will enlarge if neglected and can lead to the formation of additional potholes. Local restoration of the pavement structure is required, using an appropriate patching method.

8.3.4 Shear Failure

Shear failure can occur on either side of the wheel tracks and is usually associated with deformations or subsidence. It is caused by the ingress of water and subsequently reduced shear strength of the pavement, poor quality materials, poor workmanship, insufficient compaction or the passage of vehicles that are too heavy for the pavement structure. Shear failure can lead to weaker materials being forced up and further disintegration of the pavement. Small irregularities can be filled with slurry; but large irregularities with cracks require local restoration of the pavement.

8.3.5 Patching

The following points must be considered when carrying out patching:

- Whether the patch is part of normal routine maintenance or it is an emergency patch required to make a road safe.
- It is essential to excavate to sound material at all edges and beneath the area to be patched, providing vertical sides to the excavation. This could include removing several unsound layers of the pavement. All loose material must be removed.
- Apply a tack coat to the bottom and all vertical sides of the excavation, so that they are fully painted with bitumen. This should not be done when water has just been removed from the pothole.
- Appropriate material must be selected for each layer of the patch.
- For shallow patches, it is more effective to apply a thick layer of one bituminous mixture.
- For large patches of considerable area and depth, the materials used to replace the base and lower layers of the pavement should have similar properties to the materials in the sound parts of the existing pavement. Care must be taken to ensure that drainage in the pavement is not impeded. The procedure for constructing a new surfacing is to reseal the patch with a surface similar to the existing one. In many cases, however, it is more convenient to use premix asphalt for the new surface.

- For patches that cover a lane width and are many metres in length, it is best to use a mini paver as this increases the speed with which the hot bituminous material can be placed and compacted.
- The viscosity of the binder used and the aggregate size must be considered. It is often preferable to use a slightly smaller aggregate size than would normally be used in the pavement design as this will increase workability and reduce segregation; better compaction will also be achieved.
- The material should be placed, raked (levelled) and compacted while it is still hot. It is important that enough operatives are on site to do this[12].

8.3.6 Timing of Repair Works

Before a thin bituminous surfacing can be applied, adequate time must be allowed for repair works to cure and settle. Curing periods specified in the ERA Specification 2002 Series 6000 are as follows:

- Texturing using fine slurry: 6 weeks.
- Rapid setting slurry: 12 weeks.
- Crack sealing: 2 weeks.
- Patch repairs: 6 weeks.

8.4 Surface Defects and Repair

The condition of the existing surface must be checked prior to re-surfacing work. An assessment must be made of the following defects and their extent:

- Surface texture and aggregate loss.
- Condition of the existing binder and areas of bleeding.
- Age and hardness of the existing surface.
- Areas of small irregularities and rutting.
- Cracking in the road surface, the type of cracking, its severity and extent.

8.4.1 Aggregate Loss

Aggregate loss can occur in small areas or strips of the road surface. It may be caused by insufficient binder due to a faulty spray nozzle, dirty or dusty aggregate during construction, insufficient embedment of the aggregate or poor quality workmanship. This can lead to stripping, fretting or streaking and can be treated with surface patching.

Where there is the potential for loss of aggregate due to dry binder or voids in the surface, then a diluted emulsion may be applied as a fog spray.

8.4.2 Bitumen Bleeding

Bleeding of the bitumen can occur if too much has been applied or an unsuitable binder has been used. This can lead to a slippery road surface when wet and a loss of surface texture, as well as the breakaway of the surface layer under the action of traffic. Bleeding can be remedied by applying small aggregate or coarse sand without fines to the surface. An additional option is to roll heated chippings into the bleeding surface. Alternatively, an enrichment spray can be applied followed by an application of chippings.

[12] C.J. Summers. The Idiots' Guide to Highways Maintenance, highwaysmaintenance.com, 2012.

8.4.3 Surface Dressing

Surface dressing is usually considered as a periodic maintenance activity, carried out when the road surface has become permeable, lost skid resistance, has become extensively worn or cracked. There are usually repairs required before a surface dressing can be carried out. These include patching or the repair of cracks, potholes and ruts, as described in Section 8.2.

It must be noted that surface dressing can only be carried out in dry weather, and it will not correct structural problems in the roadbase. Surface dressing can be used to correct the following surface defects:

- Bleeding of binder.
- Loss of aggregate, stripping or fretting.
- Sealing hairline cracks.
- Glazing, if the aggregate has sunk into the binder or worn away so that the surface is smooth.
- Streaking of the binder.
- Slight subsidence deformation; surface dressing can be used as a preventative measure to prevent this defect from worsening, but significant deformations require patching followed by a surface dressing.

A surface dressing used as a maintenance tool should be designed and constructed as described in Section 4 and Section 6.

8.4.4 Slurry Seals

Slurry sealing is particularly appropriate for maintaining old bituminous surfaces, as the slurry mix will penetrate and seal surface voids and cracks. However, slurry seals tend to be more expensive than surface dressing and may not improve skid resistance unless used as part of a Cape seal.

8.4.5 Fog Sprays

A fog spray is a diluted emulsion that should be sprayed to an existing surface that is dry or porous (shown by the grey colour of the surface) in order to enrich the surface.

A fog spray can be applied to a road surface that is deficient in bitumen in order to bind together chippings that would otherwise be picked off by the action of traffic as described in Section 6.12. Fog sprays can be used to improve retention of chippings on a new surface or to enrich the bitumen in an old surface and make it more mobile.

When dealing with enrichment of old surfaces it is important that an emulsion of suitable viscosity is used in order to flow around existing particles and achieve as deep a penetration into the existing seal as possible. With this in mind the following emulsions are available for use with fog sprays:

- Anionic or Cationic Stablemix 60%
- Unfluxed Cationic Spray 60, 65 or 70%
- Unfluxed Cationic Spray 65 or 70% modified with SBR latex

- Latex modified cationic microsurfacing emulsion.

Maximum penetration into the existing surface is achieved with the low viscosity stablemix; but spray grades exhibit a quick breaking action. The SBR and latex modified emulsions remain more flexible than the other binders and have the ability to seal fine cracks. The decision on which emulsion to use will depend on the importance of these characteristics for the specific situation and the overall costs.

8.4.6 Alternative Sealing Options

There are various types of thin bituminous surfacing that can be used as maintenance options. Local conditions may make an alternative form of thin bituminous surfacing preferable to a surface dressing. A sand seal or Otta seal may be more appropriate if suitable single sized chippings are not available or are prohibitively expensive.

8.5 Cracks

Cracking in an existing road surface can appear in the form of longitudinal cracking, transverse cracking, crocodile cracking, or block cracking. The necessary repair work will depend on the depth and width of the cracks, particularly if they allow water into the unbound pavement layers. Some minor and hairline cracking usually occurs over the life of a pavement; the causes of more severe cracking must be determined and the pavement properly repaired before a new surfacing is constructed. Figure 65 to Figure 68 show different types of cracking.

Cracks can be classified as active or passive cracks. The appropriate treatment will depend on the type of crack. Generally, the sooner cracks are repaired and treated, the longer the life of the pavement will be.

Figure 65: Longitudinal cracking

Figure 66: Transverse cracking

Figure 67: Crocodile cracking

Figure 68: Block cracking

It is possible to monitor the total movement of cracks if it is considered that existing cracks may reflect through the new surface. The pavement should be evaluated if there doubt whether a pavement is in an acceptable condition to be resealed or whether it may need to be rehabilitated. If there is evidence of pumping, it must be assumed that there is some movement across the crack.

Figure 70 shows a Crack Activity Meter (CAM) developed by the CSIR in South Africa. The CAM measures crack movement and the results indicate what type of treatment or surfacing is required. Generally a check list can be prepared for use during the inspection and, if the cracks are not pumping and the pavement appears to be sound, the expense of a CAM survey may not be warranted. The facility is available if there are any doubts about the treatment that should be used.

Figure 69 shows a road with cracks sealed by grouting. Severe cracks can also be repaired with an appropriate patching method, such as geofabric patching.

Figure 69: Crack sealing

Figure 70: Crack monitoring

8.5.1 Active Cracks

Cracks that move substantially when traffic passes over them are often termed 'Active Cracks'. Most crocodile cracks are active and the pavement must be properly repaired wherever they occur. Longitudinal, transverse and block cracks can all be active and cause the crack to reflect through a new bituminous surfacing placed on top. The activity of a crack does not necessarily depend on its width but on the combined horizontal and vertical movement as traffic travels along the road. Active cracks often occur as reflection cracks on the top of a semi-rigid pavement with one or more layers stabilised with lime or cement. These cracks form when a stabilised layer is not properly cured and is allowed to dry and shrink, particularly within the first few days. The longer the layer can be kept damp the less is the shrinkage and cracking in it.

Wide cracks can also form in asphalt premix layers due to shrinkage of the premix when the volatiles start to dry out. These cracks start at the top of the layer and progress downwards. If they are sealed before the crack reaches the lower part of the layer the surfacing can remain impermeable to water. They will only become active if the binder becomes brittle with age, it does not receive a rejuvenating spray, and the crack penetrates the full depth of the premix.

In wet weather, water will pass through cracks and weaken the top of the base, reducing the support it gives to the surfacing. Eventually the fines in the base will be pumped out through the cracks when trucks travel over them, further reducing the support from the base.

Once block cracking has occurred it should be established whether the 'blocks' are loose, in which case there is no point in sealing the cracks. The 'block' will need to be removed and replaced.

8.5.2 Passive Cracks

Passive cracks can include crocodile (fatigue) cracks, longitudinal cracks, surfacing cracks and parabolic cracks caused by slippage of the fill. Before carrying out treatment it is essential to establish whether these cracks have loosened the pavement material, whether they are on the surface only or if they are deeper. The extent of the cracking should also be established.

Fatigue cracks, or crocodile cracks, occur as a result of high deflections, repetitive loading and the type and quality of the surfacing. They usually occur only in the wheel paths. If these cracks occur in isolated areas, the quality of the material below the surface should be investigated in order to establish if replacement of the material at these pocket failures is necessary. It must also be established whether there is ponding of water at these locations, and if there is a defect in the shape of the road.

Crocodile pattern cracks often occur as a result of ageing of the binder in the surface. This is due to UV radiation and oxidisation of the material. Cracking can also be caused by thermal shrinkage in the surfacing or by inadequate binder in the surfacing. Such cracking will exhibit no deformations in the pavement; the surface will remain level and uniform. These cracks will deteriorate with time and the ingress of water, and with increasing traffic volumes. If this cracking generally appears across most of the road, the shape of the road is

sound and the road is known to be at least 6 or 7 years old, the cracks can be designated as shrinkage or aging cracks and can be repaired accordingly.

Parabolic cracks typically occur in areas of low fill or high fill, on unstable subgrade. They occur as a result of a slip in the fill. Before the slip is treated, it must be established whether or not the fill is generally stable or if complete slippage is possible. If the resources for earthworks are not available, the crack treatment can be regarded as a holding operation that should be monitored regularly.

Deep longitudinal cracks are often caused by active subgrade or inadequate shoulders, and must be treated as soon as possible to prevent the ingress of water.

8.5.3 Treatment of Cracks

The first step in the treatment of cracks is to establish their cause and the type of cracking present. This includes whether the cracks are active or passive, whether they are surface cracks or extending into the pavement, and whether there is secondary block cracking.

It must be established whether the cracks are being caused by underlying structural problems such as inadequate materials, inadequate pavement layer thicknesses or any other structural problem as previously described, as this cannot be solved simply by sealing the cracks.

It should also be determined whether the base is cement treated or lime treated; primary active cracks will usually appear at 1.5 to 3.5 m intervals in cement treated base and at 4 to 7 m intervals in a lime treated base.

The points at which pumping is occurring must be established, as well as the reasons for the ingress of water apart from the cracks themselves. The source of water ingress must also be determined. Typical drainage problems can include:

- Dense shoulders built with clayey (high PI) gravel boxing in the base, inhibiting free drainage. In this case special sub-surface drains may be required in the centreline of the road, and/or herringbone drains.
- Water ponding on the shoulders and seeping into the pavement layers via cracks, due to incorrect shape of the shoulders. In this case the slope of the shoulders must be restored so that water can flow away from the surface.
- Inadequate depth of the side drains, leading to water from higher ground flowing underneath the drain and into the pavement layers. In this case the side drains should be deepened.
- No sub-surface drains through cuttings; in this case sub-surface drains should be constructed.
- The surface is excessively porous. This can be rectified by the application of a surface dressing.

Once any drainage problems have been rectified, cracks can be repaired as appropriate. Very thin hairline cracks that are only in the surfacing can be repaired by resealing the surface. Cracks up to 3 mm that extend below the surfacing should be repaired as follows:

- Clean the crack and remove any debris using a jet of compressed air.

- Remove weeds or any other plant growth seen in the crack and spray the crack with a suitable herbicide. The herbicide should be left for 24 hours before continuing.
- Apply a prime to the sides of the crack.
- Fill the crack with a jet of modified emulsion containing 4 to 5% of net rubber in net bitumen. This can be made on site by blending emulsified rubber with 60 or 70% anionic emulsion. Two or three applications may be necessary.

Cracks greater than 3mm should be repaired as follows:

- Repeat the first three steps above.
- Ensure that the surface is even on either side of the crack.
- Fill the crack with a rubber slurry consisting of 8.0 parts (by volume) crumbed rubber, 2.0 parts crusher dust, 4.5 parts 60% stable grade bitumen emulsion, 0.2 parts ordinary cement and 1.1 part of net rubber; water can be added as necessary to improve workability.
- Remove any excess slurry from the surface.

In the case of secondary cracking that has caused loose blocks in the road, the loose block must be removed and replaced.

APPENDIX A TYPES OF EQUIPMENT

Frame No: 001
Description: Static Crushing Plant

Frame No: 002
Description: Mobile Crushing Plant

Frame No: 003
Description: Hand Crushing Chippings

Frame No: 004
Description: Front End Loader

Frame No: 005
Description: Tractor with Front End Loader Attachment

Frame No: 006
Description: Truck Mounted Water Bowser

Frame No: 007
Description: Towed Bitumen Heater/Distributor (Phoenix Engineering)

Frame No: 008
Description: Emulsion Application by Known Containers (Intech)

Frame No: 009
Description: Slurry Seal Machine (Duncor)

Frame No: 010
Description: Spreading Slurry by Squeegee (United)

APPENDIX B LABORATORY TESTS

Testing Materials for Thin Bituminous Surfacings

All materials used in thin bituminous surfacings must be tested to ensure that they provide the specified properties required in the design. Aggregates must meet certain standards in terms of grading, flakiness, strength and soundness. Bitumen used in thin bituminous surfacings must have the correct viscosity and fluidity at spraying temperatures. For safety reasons it is also important to know the flashpoint of the binder that will be used.

Bitumen Penetration Test

This test is described in AASHTO T 49[13], which should be consulted before undertaking this test. A summary of the test is set out below.

The bitumen sample is melted and cooled under controlled conditions. The penetration is measured with a penetrometer, which has a standard needle that is applied to the sample under specific conditions. Higher values of penetration indicate a softer consistency.

Penetration Apparatus
The penetrometer permits the needle holder (the spindle) to move vertically without measureable friction and is capable of measuring the depth of penetration to the nearest 0.1mm. The weight of the spindle is 47.5 ±0.05g. The total weight of the needle and spindle assembly is 50.0 ±0.05g. The surface on which the sample container rests is to be flat and the axis of the plunger is at 90° to this surface, the plunger is to be easily detached for checking its weight.

Penetration Needle
Fully tempered and hardened stainless steel is used to manufacture the needle which is approximately 50mm in length and 1.00 to 1.02mm in diameter. At one end is a cone, which has an angle between 8.7 and 9.7° over its length. The cone is coaxial with the straight body of the needle, and the edge of the truncated surface of the cone is sharp and free of burrs.

The needle is mounted in a brass or stainless steel ferrule and the exposed length is between 40 and 45mm. The ferrule is 3.2 ± 0.05mm in diameter and 38 ±1mm in length.

The needle is rigidly mounted in the ferrule, which is 2.50 ± 0.05 g. individual identification markings are placed on the ferrule of each needle.

[13] AASHTO T 49 Standard Test Method for Penetration of Bituminous Materials.

Figure 71: Needle for the penetration test

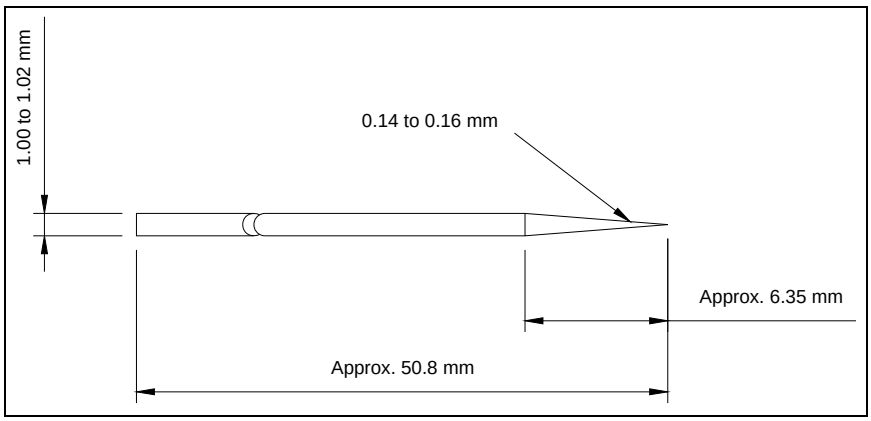

Sample Container
The sample container is a flat-bottomed, cylindrical container made from metal or glass, with the following dimensions:

Table 35: Sample container dimensions, taken from AASHTO T 49

	Diameter, mm	Internal depth, mm
For penetrations below 200	55	35
For penetrations between 200 and 350	70	45

Water Bath
A capacity of at least 10l is required in the bath and it must be capable of maintaining a temperature of 25 ±0.1°C or any other testing temperature within ±0.1°C. The bath must have a perforated shelf supported in a position not less than 50 mm from the bottom and not less than 100 mm below the liquid level in the bath. If penetration tests are carried out in the bath itself, an additional shelf strong enough to support the penetrometer is provided. Brine may be used in the bath for determinations at low temperatures, although the use of distilled water is recommended.

Transfer Dish
If used, the transfer dish has a capacity of at least 350ml and sufficient water depth to cover the large sample container. It is given a firm bearing using a three legged stand with three points of contact to the sample container, so that rocking of the container does not occur.

Timing Device
A timing device such as an electric timer, stopwatch or a spring-activated device may be used if it is graduated in 0.1s and is accurate to within ±0.1s for a 60s interval.

Thermometers
Calibrated, liquid in glass thermometers with subdivisions and a maximum scale error of 0.1°C are used. Thermometers must be periodically calibrated.

Test Method
The standard test is carried out using a bitumen sample which has been cured at a temperature of 25^0C. The needle and spindle are assembled in the penetrometer and a 50g weight placed on top making a total moving load of 100g. Slowly lower the needle until it just touches the surface of the bitumen at which point a zero measurement can be made. The needle is released and, after 5 seconds, the penetration is measured in tenths of a millimetre. Three tests are carried out and the average is used as the penetration value of the sample of bitumen.

Bitumen Ductility Test

This test is described in AASHTO T 51[14]. It measures the tensile properties of bituminous materials and can be used to measure the ductility for specification requirements. The apparatus used includes:

- A brass mould, as shown in Figure 72.
- A water bath, maintained at the test temperature of 25°C to within 0.1°C. The volume of water must be at least 10l, with the specimen immersed at a depth of at least 100 mm, and supported on a perforated shelf at least 50 mm from the bottom of the bath.
- A testing machine is used to pull the briquette of bitumen apart. The apparatus must keep the specimen immersed in water during the test and have clips that pull the specimen apart at a uniform speed of 5cm per minute, without undue vibration.
- A thermometer with a temperature range of -8 to 32°C.

The test is carried out as follows:

- The mould is placed on a flat, brass plate with the interior coated with glycerine and dextrin, talc or kaolin to prevent the specimen from sticking to the mould.
- The sample is carefully heated until it is sufficiently fluid to pour, and the strained through a 300µm sieve. It is then stirred and poured into the mould.
- The mould containing the material is allowed to cool to room temperature for 30 to 40 minutes and then placed in the water bath. The water bath is maintained at the specified temperature of 25°C for 30 minutes, and then excess bitumen is cut from the sample so that the mould is level full.
- The mould containing the sample is placed in the water bath and maintained at the specified test temperature for 85 to 95 minutes, and then the briquette sample is removed from the water bath.
- The rings at each end of the clips are attached to the pins in the testing machine and the two rings are pulled apart at the uniform specified speed, with a tolerance in variation of ± 5%, until the briquette is ruptured. The distance through which the clips have been pulled to cause the rupture is measured.

[14] AASHTO T 51 Standard Test Method for Ductility of Bituminous Materials.

Figure 72 Brass mould for the ductility test

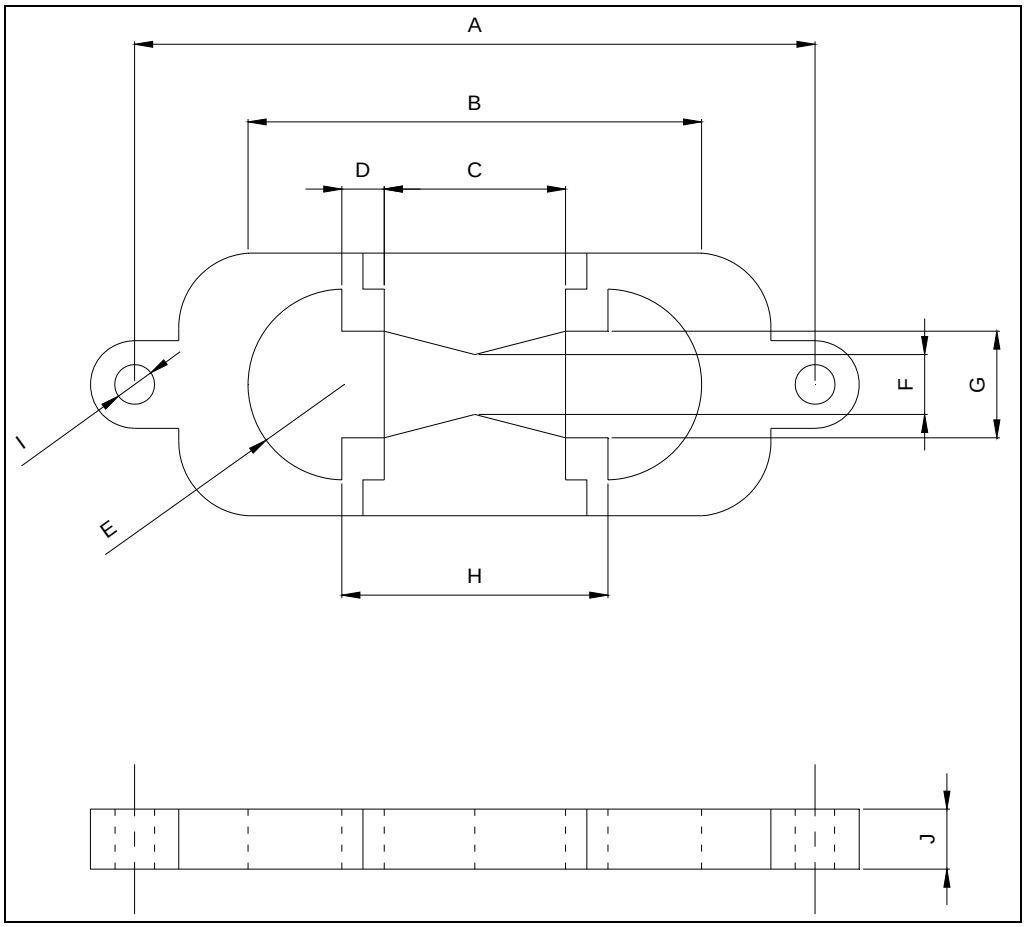

A – Distance between centres, 111.5 to 113.5 mm.
B – Total length of briquette, 74.5 to 75.5 mm.
C – Distance between clips, 29.7 to 30.3 mm.
D – Shoulder, 6.6 to 7.2 mm.
E – Radius, 15.75 to 16.25 mm.
F – Width at minimum cross section, 9.9 to 10.1 mm.
G – Width at mouth of clip, 19.8 to 20.2 mm.
H – Distance between centres of radii, 42.9 to 43.1 mm.
I – Hole diameter, 6.5 to 6.7 mm.
J – Thickness, 9.9 to 10.1 mm.

Bitumen Ring and Ball Test

Each step in this test is described in detail in AASHTO T 53[15]. Two horizontal discs of bitumen, held in brass rings, are heated at a controlled rate in a liquid bath, with each disc supporting a steel ball. The softening point is the mean temperature at which the two discs soften enough to allow the steel balls to fall 25 mm. During the test the steel balls are enveloped in bitumen.

The following apparatus is used in this test:

[15] AASHTO T 53 Softening Point of Bitumen.

- Two square shouldered brass rings, 23mm in diameter and 6.4mm in thickness.
- A flat, smooth, brass pouring plate approximately 50mm by 75mm.
- Two steel balls, 9.5mm in diameter each having a mass of 3.5g with a tolerance of ±0.05g.
- Ball centering guides made from brass for centering the balls, with an inside diameter of 23 mm to slide over the brass rings.
- Bath. A glass container capable of being heated, at least 85 mm in diameter and 120mm in depth from the bottom of the flare.
- Ring holder and assembly. A brass holder that supports the two rings in a horizontal position. The bottom of the shouldered rings in the ring holder are 25mm above the upper surface of the bottom plate, and the lower surface of the bottom plate is 16mm ±3mm from the bottom of the bath.
- An ASTM Low Softening Point Thermometer, with a range of -2 to +80°C.
- An ASTM High Softening Point Thermometer, with a range of 30 to 200°C.
- An ASTM Bituminous Materials Softening Point Thermometer, with a range of -1 to 175°C.

The appropriate thermometer is suspended in the assembly so that the bottom of the bulb is level with the bottom of the rings and within 13mm of the rings, but not touching them or the holder.

Figure 73: Ring and ball assembly

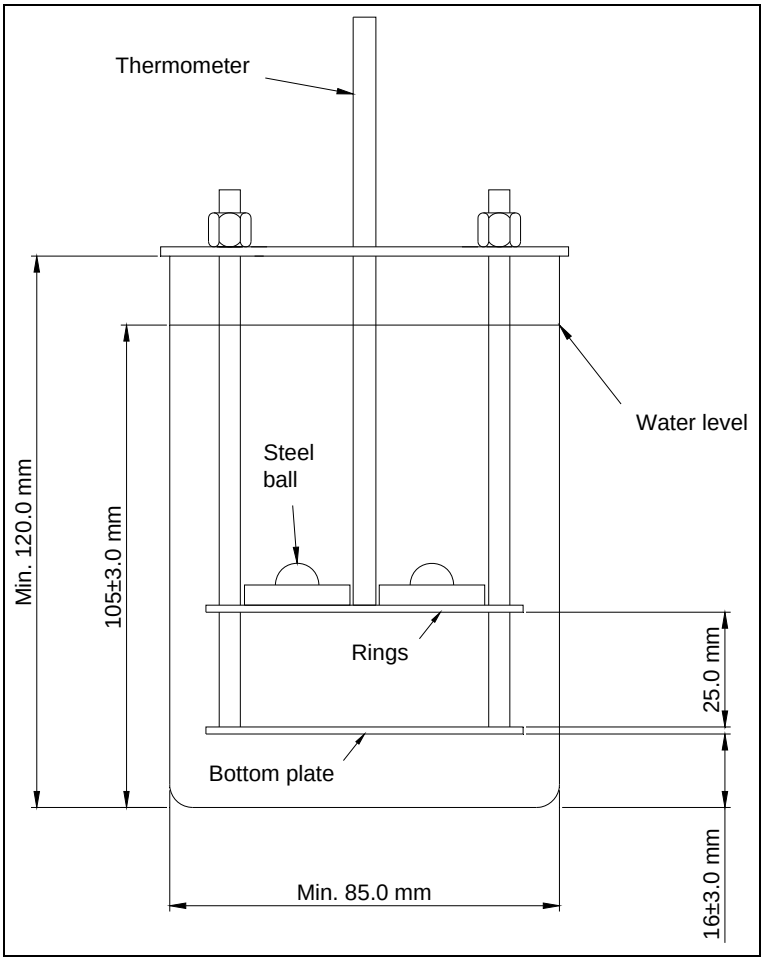

Figure 74: Shouldered ring, softening point test

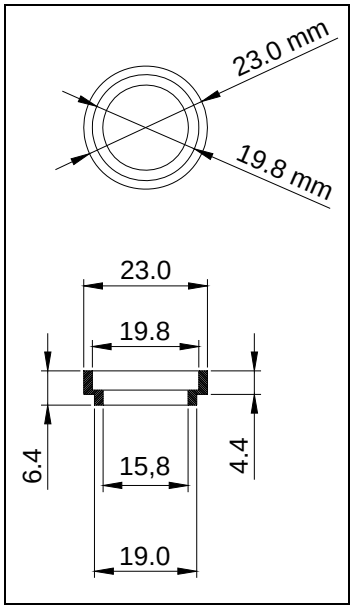

Figure 75: Ring holder, softening point test

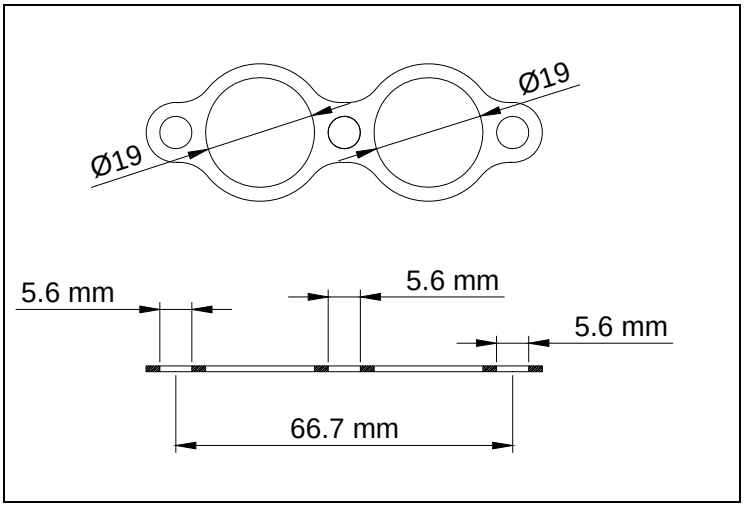

Figure 76: Ball centering guide, softening point test

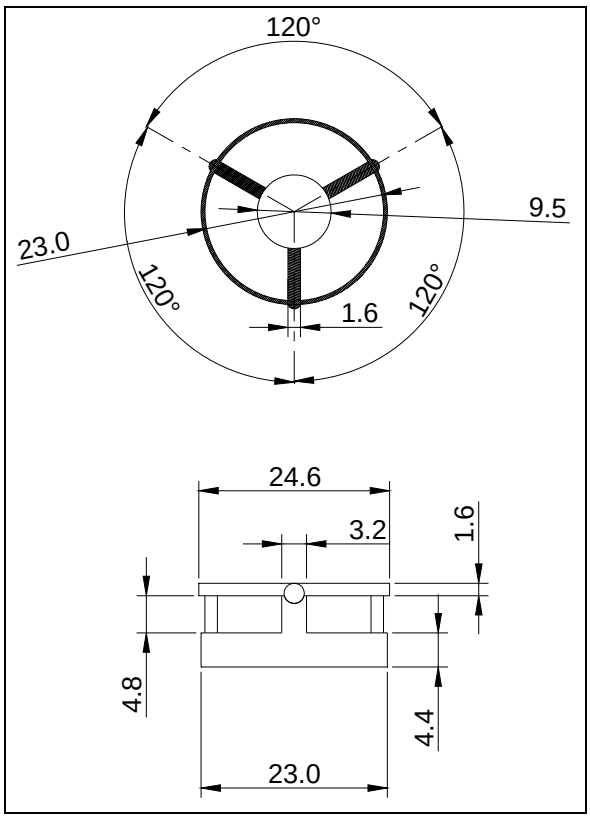

Saybolt Furol Viscosity Test

This test is fully described in AASHTO T 72[16]. In this test, the efflux time in seconds of a 60 ml sample of bitumen flowing through a calibrated orifice, is measured in controlled conditions. This time is corrected by an orifice factor and recorded as the viscosity of the sample at that particular test temperature.

[16] AASHTO T 72 Standard Specification for Saybolt Viscosity.

Figure 77: Saybolt viscometer with universal and Furol orifice

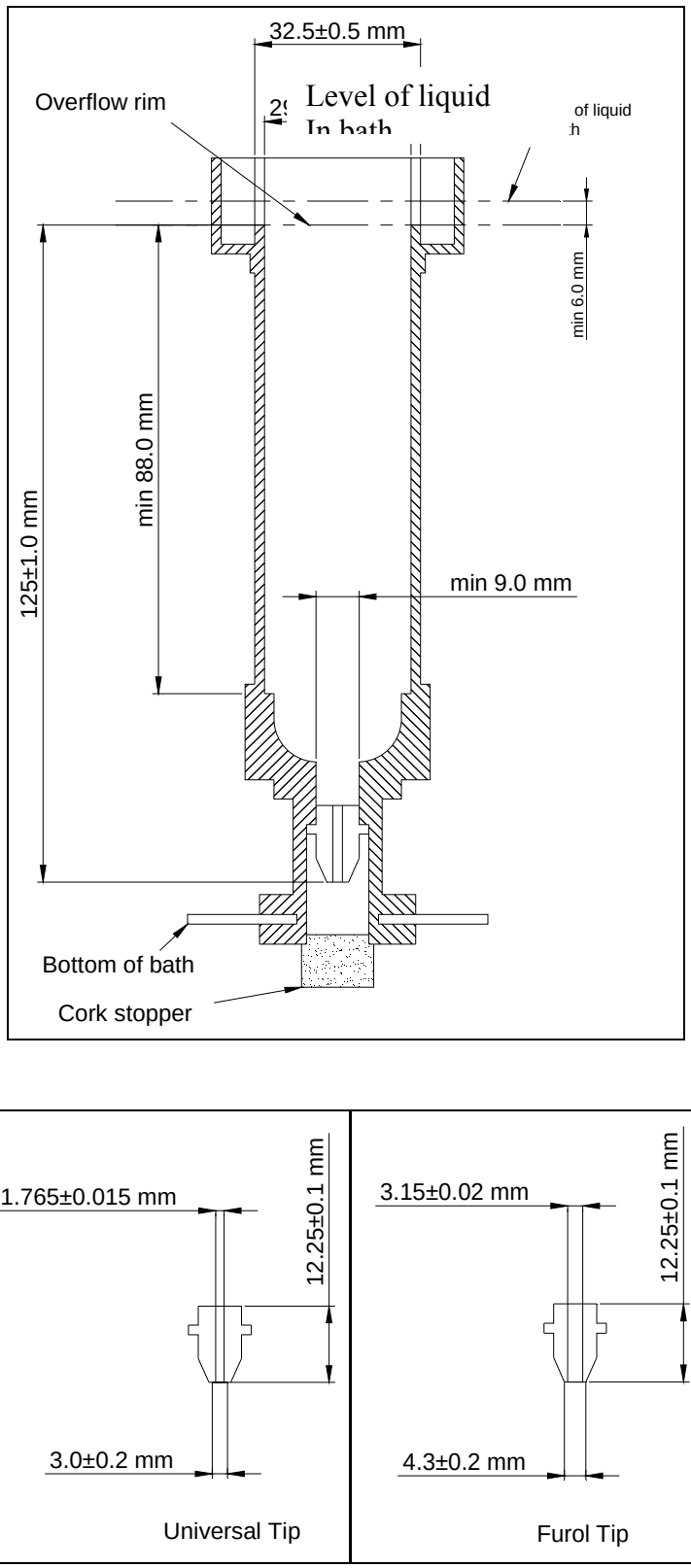

Figure 78: Withdrawal tube for use with the Saybolt Viscometer

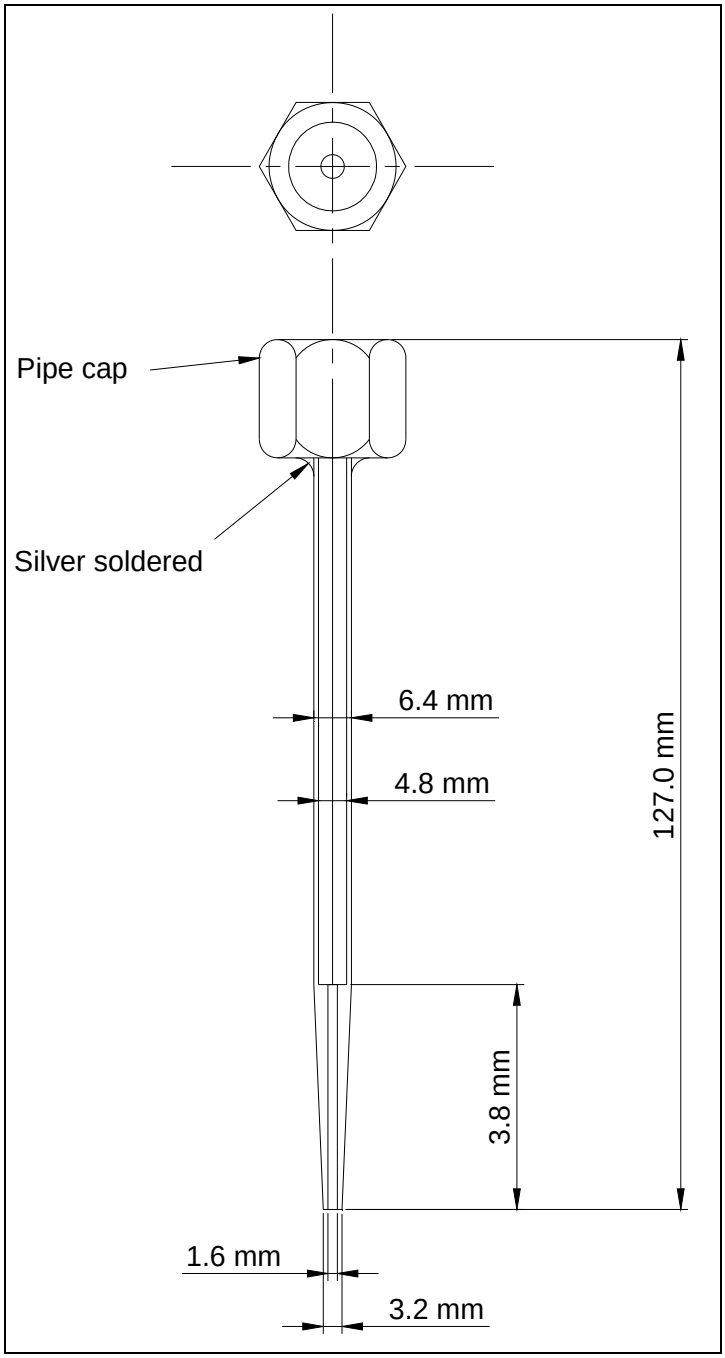

Figure 79: Thermometer support

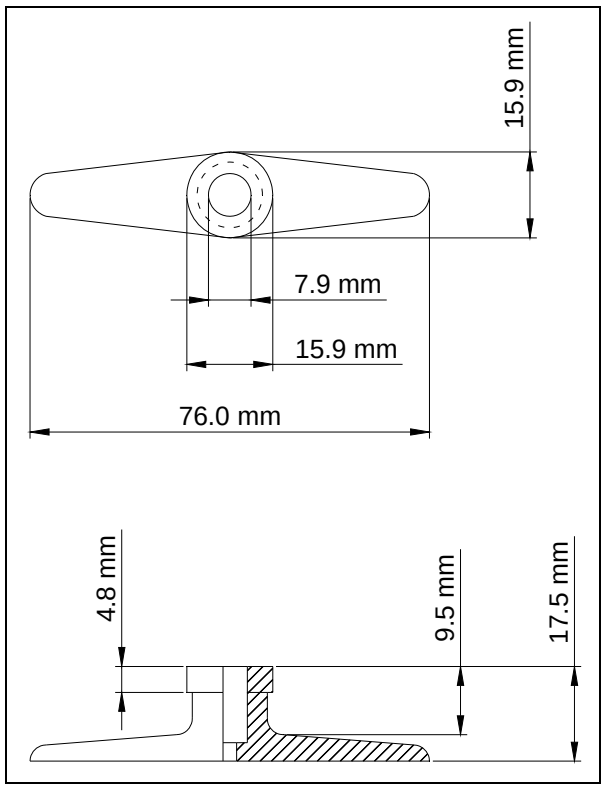

The following apparatus is used in this test:

- The Saybolt Viscometer as shown in Figure 77, and the withdrawal tube as shown in Figure 78.
- The thermometer support as shown in Figure 79, with Saybolt Viscosity thermometers as shown in Table 35.
- Bath thermometers, Saybolt Viscosity thermometers or any other device with equivalent accuracy.
- Filter funnel as shown in Figure 80, equipped with interchangeable 150 µm and 75 µm wire cloth inserts.
- Receiving flask as shown in Figure 81.

Figure 80: Filter funnel for use with Saybolt Viscometer

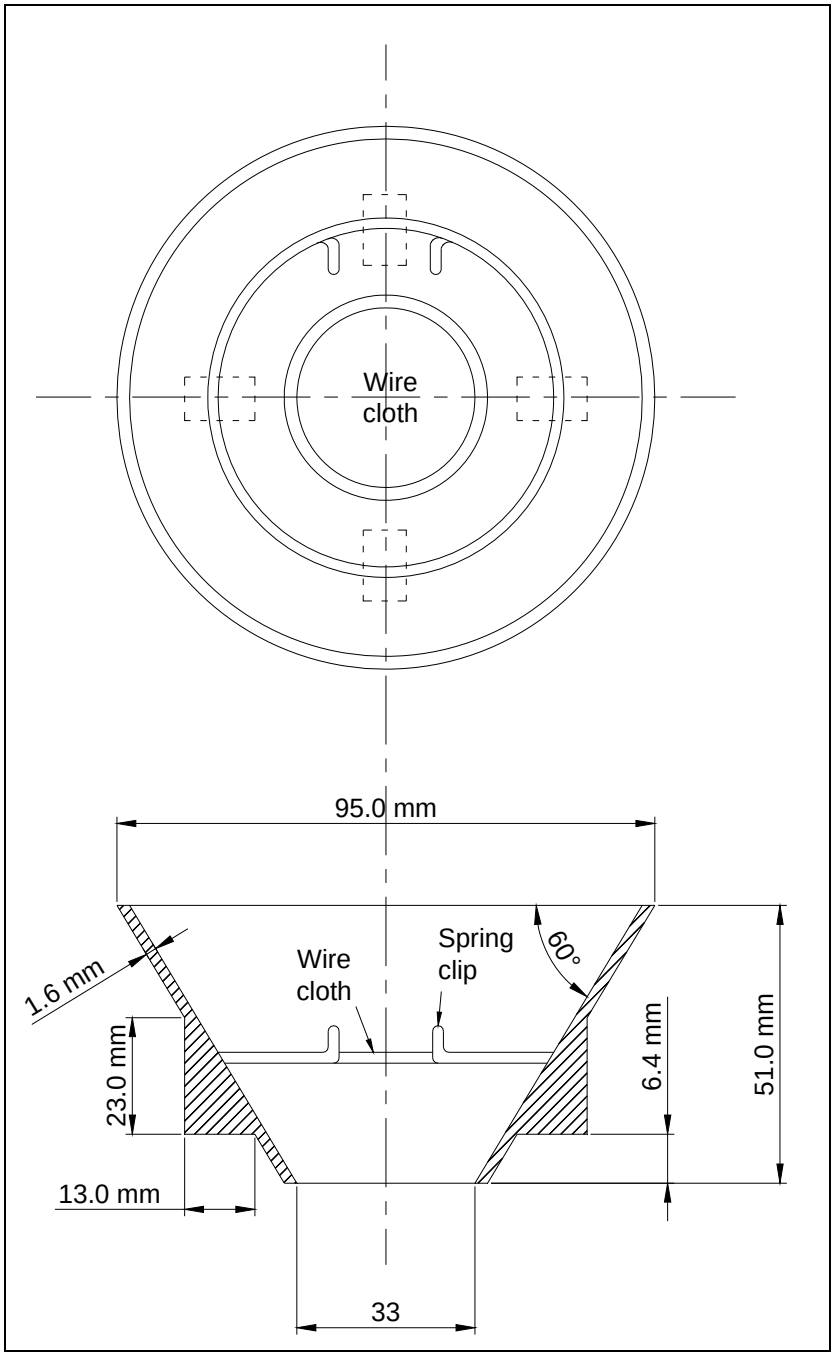

Figure 81: Receiving flask

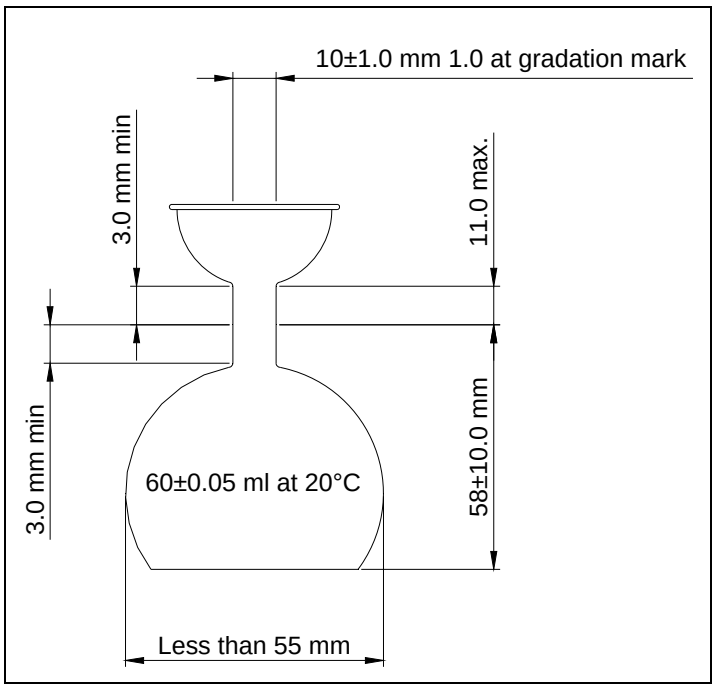

Table 36: ASTM Saybolt Viscosity Thermometers

Standard Test Temperature, °C	Thermometer	
	Range, °C	Subdivisions, °C
21.1	19-27	0.1
25.0	19-27	0.1
37.8	34-42	0.1
50.0	49-57	0.1
54.4	49-57	0.1
60.0	57-65	0.1
82.2	79-87	0.1
98.9	95-103	0.1

Kinematic Viscosity of Bitumen

Full details of the standard test for determining kinematic viscosity of bitumen are given in AASHTO T 201[17]. In this test the time is measured for a fixed volume of the liquid to flow through the capillary of a calibrated glass capillary viscometer under an accurately reproducible pressure head, at a closely controlled temperature. The kinematic viscosity is

[17] AASHTO T 201 Standard Specification for Kinematic Viscosity of Asphalts (Bitumens).

then calculated by multiplying the efflux time in seconds by the viscometer calibration factor. The following apparatus is used:

- A capillary type viscometer made from borosilicate glass. Viscometers suitable for this test include the Cannon-Fenske viscometer for opaque liquids, the Zeitfuchs cross-arm viscometer and the BS U-Tube moderated reverse flow viscometer. Calibrated viscometers are available from suppliers.
- A calibrated liquid-in-glass thermometer with accuracy after correction of 0.02°C. Complete submersion of the thermometer in the bath during the test is not recommended. Thermometers should be periodically calibrated.
- A bath that is suitable for immersion of the viscometer so that the liquid reservoir or the top of the capillary, whichever is highest, is at least 20mm below the upper bath level, providing visibility of the thermometer and the viscometer. The viscometer should be firmly supported, if it is not an integral part of the bath. The temperature of the bath medium must not vary by more than ±0.03°C.
- A timer, stopwatch or other spring activated device graduated in divisions of 0.1s or less and accurate to within 0.05% when tested over intervals of at least 15 minutes. Electrical timing devices powered by alternating currents can cause large errors, particularly over short periods.

Bitumen Flashpoint Test

The standard for carrying out this test is AASHTO T 79[18].

In this test the sample is placed in a container and heated at a slow and constant rate, and a small test flame is passed at a uniform rate in a level plane across the cup at specific intervals. The flash point is indicated by the lowest temperature at which the test flame causes the vapour at the surface of the liquid to flash. The following equipment is used:

- Tag open-cup tester, consisting of a glass test cup, copper water bath, thermometer holder, small gas burner, ignition taper, liquid levelling device and draft shield.
- A Pensky Martens, low range thermometer with a range of -5 to 100°C.
- Bath media, water for flash points to 79.5°C and water-glycol solution (1:1) for flash points above 79.5°C.

[18] AASHTO T 79 Flash Point with Tag Open-Cup Apparatus for use with material having a flashpoint less than 93.3°C.

Figure 82: Tag Open-Cup Flash Tester

Grading and Flakiness Index of Aggregate

A flaky chipping is described as one with a thickness less than 0.6 of the mean size of the sample. This size is given by the mean of the limiting sieve apertures used for determining the size fraction of the chipping. The flakiness index is measured by separating the flaky chippings in a sample and expressing their mass as a percentage of the mass of the sample. The method for finding the flakiness index is fully described in BS 812-105[19]. The following equipment is used in this standard test:

- A ventilated oven thermostatically controlled to maintain a temperature of 105 ±5°C.
- A balance to measure mass of chippings to within 0.1% accuracy.
- Test sieves of the sizes and apertures shown in Table 36.
- Trays, which can be heated in the ventilated oven without damage or change in mass.

A metal thickness gauge made from 1.5mm thick steel, as shown in Figure 83. Tolerances for the width and length of the apertures in the thickness gauge and in the sieves are shown in Table 37.

[19] BS 812 Testing aggregates — Part 105: Methods for determination of particle shape — Section 105.1 Flakiness index.

Table 37: Particulars of Sieves

Nominal aperture sizes (Square hole perforated plate 450 mm or 300 mm diameter) , mm
63.0
50.0
37.5
28.0
20.0
14.0
10.0
6.3

Figure 83: Thickness gauge

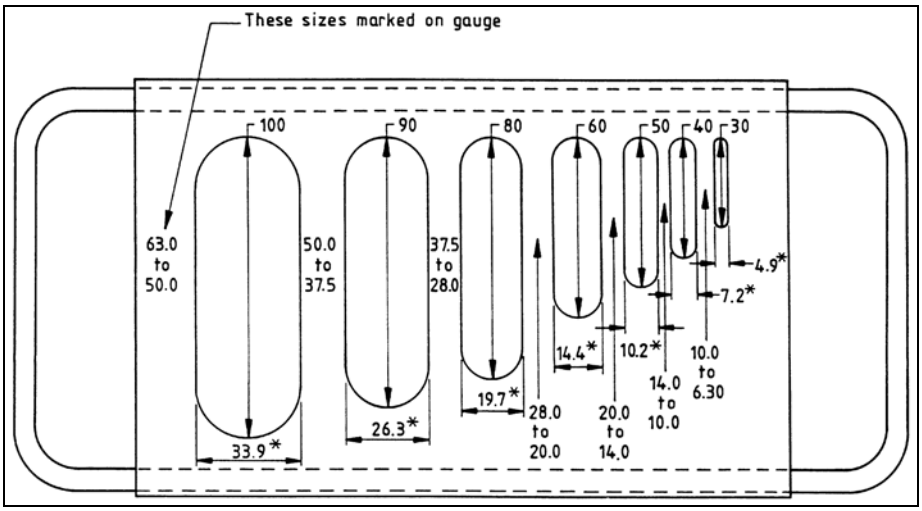

Table 38: Data for determination of flakiness index

Aggregate size-fraction		Width of slot in thickness gauge or special sieve, mm	Minimum mass for subdivision, kg
BS test sieve nominal aperture size			
100% passing, mm	100% retained, mm		
63.0	50.0	33.9 ± 0.3	50
50.0	37.5	26.3 ± 0.3	35
37.5	28.0	19.7 ± 0.3	15
28.0	20.0	14.4 ± 0.15	5
20.0	14.0	10.2 ± 0.15	2
14.0	10.0	7.2 ± 0.1	1
10.0	6.3	4.9 ± 0.1	0.5

The test is conducted as follows:

- A sieve analysis is carried out in accordance with section 7.3 of BS 812-103.1:1985 using the sieves given in Table 1 of that standard. All aggregates retained on the 63.0mm sieve and all aggregates passing the 6.3mm sieve are discarded.
- Each of the individual size fractions retained on the sieves are weighed and placed into trays marked according to their size.
- From the sums of the masses of the fractions in the trays, M_1, the individual percentage retained on of each of the sieves is calculated. Any fraction whose mass is less than 5% of M_1 is discarded, and the remaining mass is recorded as M_2.
- Gauge each fraction either by shaking the whole of the fraction through the appropriate special sieve until the majority of flaky chippings has passed through, or use the appropriate slot on the thickness gauge and gauge each particle of that size fraction by hand.
- All of the particles passing through each of the gauges are combined and weighed, and recorded as M_3.

The following equation is used to determine the flakiness index:

$$\textit{Flakiness index} = M_3/M_2 \times 100$$

Aggregate Crushing Value

The standard test for determining the Aggregate Crushing Value (ACV) is carried out according to BS 812-110[20]. The principle of this test is that a test specimen is compacted into a steel cylinder fitted with a plunger. The test sample is then loaded at a uniform rate until the test load is reached. The degree of crushing in the aggregate is dependent on the crushing resistance of the sample. The whole sample is sieved and the percentage passing the 2.36mm sieve is taken as a measure of the ACV. The apparatus used in the test is shown in Figure 84 and includes the following:

- A tamping rod made from straight iron or steel and circular in section, 16 ±1 mm in diameter and 600 ±5 mm long.
- A balance of at least 3kg capacity and accurate to 1g.
- Test sieves with a square-hole perforated plate of sizes 14 mm and 10 mm and a woven wire 2.36 mm test sieve.
- A ventilated oven thermostatically controlled to maintain a temperature of 105 ±5°C.
- A compression testing machine capable of applying force up to 400kN at a uniform rate of loading, so that this force is reached in 10 minutes.
- A cylindrical metal measure for measuring the test samples, of sufficient rigidity to retain its form under rough usage, with an internal diameter of 115 ±1 mm and an internal depth of 180 ±1 mm.
- A rubber mallet.
- A metal tray large enough to carry 3 kg of aggregate.
- A brush with stiff bristles.

[20] BS 812 Testing aggregates — Part 110: Methods for determination of aggregate crushing value (ACV).

Figure 84: Outline form of cylinder and plunger apparatus for the ACV

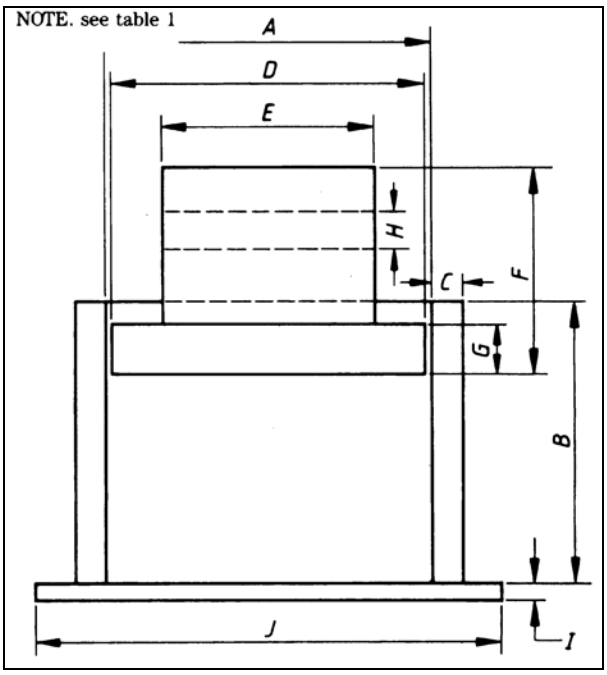

Table 39: Principal dimensions of cylinder and plunger apparatus for ACV

Component	Dimensions (see Figure 84)	Nominal 150mm internal diameter of cylinder	Nominal 75mm internal diameter of cylinder
Cylinder	Internal diameter, A	154 ±0.5	78.0 ±0.5
	Internal depth, B	125 to 140	70.0 to 85.0
	Minimum wall thickness, C	16.0	8.0
Plunger	Diameter of piston, D	152 ±0.5	76.0 ±0.5
	Diameter of stem, E	< 95 to ≤ *D*	> 45.0 to ≤ *D*
	Overall length of piston plus stem, F	100 to 115	60.0 to 80.0
	Minimum depth of piston, G	not less than 25.0	not less than 19.0
	Diameter of hole, H	20.0 ±0.1	10.0 ±0.1
Baseplate	Minimum thickness, I	10	10
	Length of each side of square, J	200 to 230	110 to 115

The aggregate should suit the requirements shown in Table 40.

Table 40: Minimum mass of test portions required to obtain a suitable mass of material to determine the ACV

Grading of the aggregate, mm	Minimum mass of the test portion, kg
All in aggregate 40 max size	60
All in aggregate 20 max size	45
Graded aggregate 40 to 5	40
Graded aggregate 20 to 5	25
Graded aggregate 14 to 5	15

The test is carried out as follows:

- Prior to the test the aggregate is dried in the oven.
- The aggregate is sieved and the fraction passing the 14mm sieve and retained on the 10mm sieve is used as the sample.
- The cylinder of the test apparatus is placed in position on the base plate and the test sample is added in three layers of equal depth. Twenty-five strokes from the tamping rod are distributed evenly over the surface of each layer of the sample. The surface of the aggregate is levelled and the bottom of the piston is rested on its surface.
- The apparatus is placed between the plates of the testing machine with the plunger in position, and the load is applied at as uniform a rate as possible so that the required force of 400kN is reached in 10min ±30 s.
- The load is released and the crushed material is removed by holding the cylinder over a tray and hammering the outside of the cylinder with the rubber mallet, until the pieces of aggregate fall on to the tray. The stiff bristled brush is used to remove any particles from the inside of the cylinder onto the tray. The aggregate on the tray is then weighed and recorded as M_1.
- The whole of the sample on the tray is sieved on the 2.36mm sieve until no further significant amount passes the sieve during a period of 1 minute. The masses of the fractions passing and retained on the sieve are weighed and recorded as M_2 and M_3 respectively. The total mass of M_2 and M_3 should not differ from the mass of M_1 by more than 10g.

The above procedure is then repeated with a second test specimen.

The following equation is then used to determine the ACV:

$$ACV = M_2/M_1 \times 100$$

Where M_1 = the mass of the test specimen in g.
M_2 = the mass of the material passing the 2.36mm test sieve.

The final ACV is taken as the mean of the results for the two specimens.

Aggregate Impact Value

The test for determining the Aggregate Impact Value (AIV) is carried out according to BS 812-112[21]. During this test the sample of aggregate is placed in a steel cup and subjected to a series of blows from a falling weight. The degree of breakdown in the sample is assessed by a sieving test on the impacted specimen and used to determine the AIV.

Impact Testing Machine
The impact testing machine consists of the following parts:

- The machine is of the form shown in Figure 85 and has a mass between 45 and 60 kg.
- A circular metal base with a mass between 22 kg and 30 kg and a plane lower surface of at least 300 mm in diameter, supported on a concrete or stone floor at least 450 mm thick. The machine must be suitably fixed to the floor.
- A cylindrical steel cup with an internal diameter of 102 ±0.5 mm and an internal depth of 50 ±0.25 mm. The walls must be at least 6 mm thick and the inner surfaces are case hardened.
- A metal hammer with a mass between 13.5 kg and 14.0 kg, a diameter of 100 ±0.5 mm and a length of 50 ±0.15 mm. The hammer should be case hardened and slide freely between vertical guides, which are arranged that the lower part of the hammer is above and concentric with the cup.
- A means for raising the hammer and allowing it to fall from a height of 380 ±5 mm on to the test sample in the cup.
- Square-hole perforated-plate test sieves of sizes 14.0 mm and 10.0 mm, and a woven wire 2.36 mm test sieve.
- A cylindrical metal measure of sufficient rigidity to retain its form under rough usage, with an internal diameter of 75 ±1 mm and an internal depth of 50 ±1 mm.
- A tamping rod made from straight iron or steel and circular in section, 16 ±1 mm in diameter and 600 ± 5 mm long.
- A balance with capacity of at least 500 g.
- A ventilated oven thermostatically controlled to maintain a temperature of 105 ± 5 °C.
- A rubber mallet.
- A metal tray with capacity to hold 1 kg of aggregate.
- A brush with stiff bristles.

[21] BS 812 Testing aggregates — Part 112: Methods for determination of aggregate impact value (AIV).

Figure 85: Aggregate impact test machine

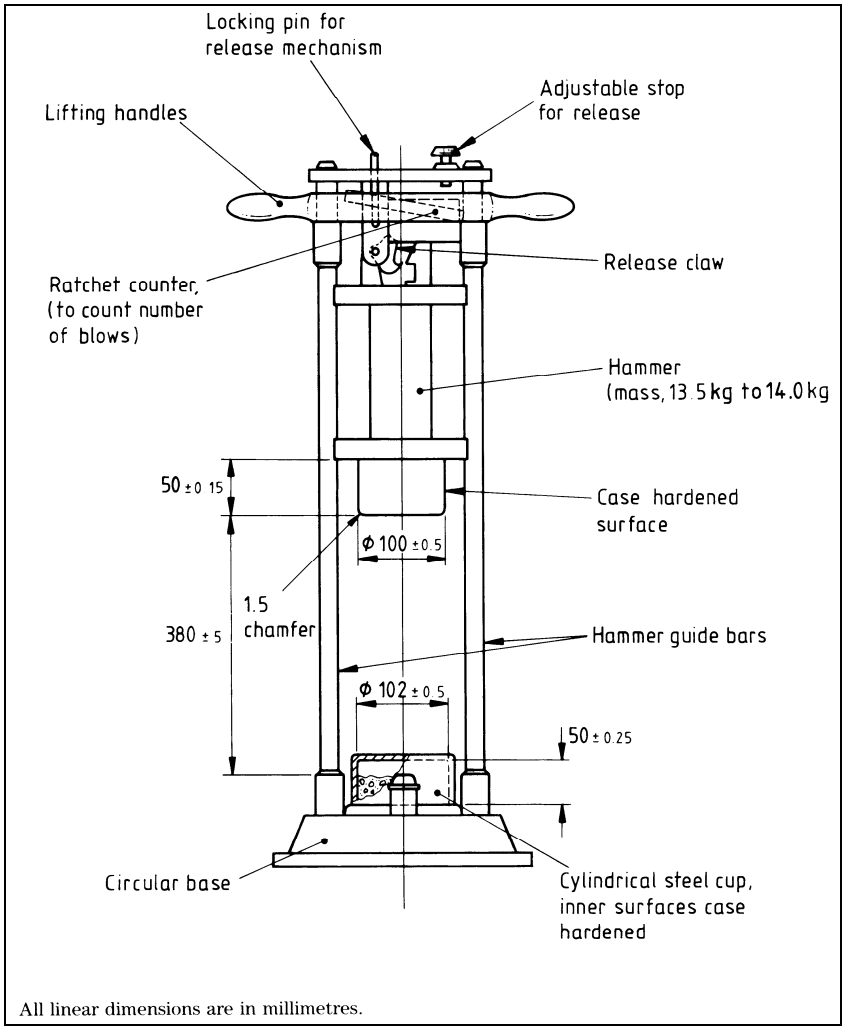

The test is carried out as follows:

- Prior to the test the aggregate is dried in the oven.
- The laboratory sample is reduced by the procedures described in clause 6 of BS 812-102 to produce a test portion of sufficient mass to produce three test specimens of 14mm to 10mm size fraction. See Table 40.
- The aggregate is then sieved and the fraction passing the 14mm sieve and retained on the 10mm sieve is used to prepare the test specimen.

Table 41: Guide to minimum mass of test portions required to obtain a suitable mass of material to determine AIV

Grading of the aggregate, mm	Minimum mass of the test portion, kg
All in aggregate 40 max size	20
All in aggregate 20 max size	15
Graded aggregate 40 to 5	12
Graded aggregate 20 to 5	8
Graded aggregate 14 to 5	5

- The whole of the test specimen is placed in the cup and then compacted by 25 strokes of the tamping rod, and the cup is fixed in position on the base of the machine. The Hammer is positioned so that its lower face is 380 ± 5 mm above the upper surface of the aggregate in the cup and then allowed to fall on to the aggregate. The specimen is subjected to fifteen of these blows, with an interval of at least 1 second between each blow.
- The crushed material is removed by holding the cup over a tray and hammering the outside of the cylinder with the rubber mallet, until the pieces of aggregate fall on to the tray. The stiff bristled brush is used to remove any particles from the inside of the cylinder onto the tray. The aggregate on the tray is then weighed and recorded as M_1.
- The whole of the sample on the tray is sieved on the 2.36mm sieve until no further significant amount passes the sieve during a period of 1 minute. The masses of the fractions passing and retained on the sieve are weighed to the nearest 0.1g and recorded as M_2 and M_3 respectively. The total mass of M_2 and M_3 should not differ from the mass of M_1 by more than 1g.
- The above procedure is then repeated with a second test specimen of the same mass as the first specimen.

The following equation is then used to determine the AIV:

$$AIV = M_2/M_1 \times 100$$

Where M_1 = the mass of the test specimen in g.
M_2 = the mass of the material passing the 2.36mm test sieve.

The final AIV is taken as the mean of the results for the two specimens.

Soundness Tests

Basic rocks can weather to form unsound materials for road pavements but unsoundness is not readily detected by visual inspection. A number of tests have been developed to identify those weathered materials that are unsound. These tests include the sodium sulphate soundness test, the ethylene glycol test, secondary mineral counts and X-ray diffraction tests. None of these tests can be guaranteed to identify every unsound specimen of rock and it is normal to conduct at least two of them.

Sodium Sulphate Test
This soundness test is included in the Ethiopian Specifications which require chippings to have a sulphate soundness value of less than 12 when tested in accordance with AASHTO T 104.

Ethylene Glycol Test
The Ethylene Glycol test is one of the simplest laboratory soundness tests, requiring only a tray divided into sections, and a supply of ethylene glycol.

Five rows of eight pieces of aggregate between 20mm and 25mm in size are submerged in ethylene glycol. The samples are inspected after one, five, ten and twenty days and the following types of deterioration in each piece of aggregate are separately recorded.

- Spalled, shed shell fragments from their edges (weighting 0.5).
- Fractured, split into two or three pieces (weighting 1.0).
- Disintegrated, split into more than three pieces (weighting 2.5).

The EG Durability Index (EGDI) is calculated by multiplying the number of pieces affected by the respective weighting factor.

The ethylene glycol test is often more effective than the sulphate soundness test in detecting unsound aggregate. For example, the two sets of aggregate shown in Figure 86 and Figure 87 had almost identical, acceptable sulphate soundness values, but the ethylene glycol test has shown one of them to be unsound.

Figure 86: Ethylene glycol test, aggregate nº 1

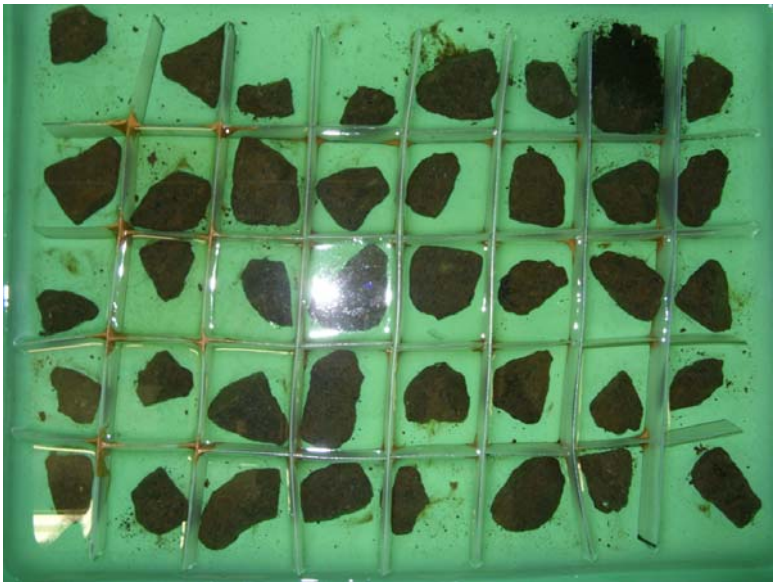

Figure 87: Ethylene glycol test, aggregate n° 2

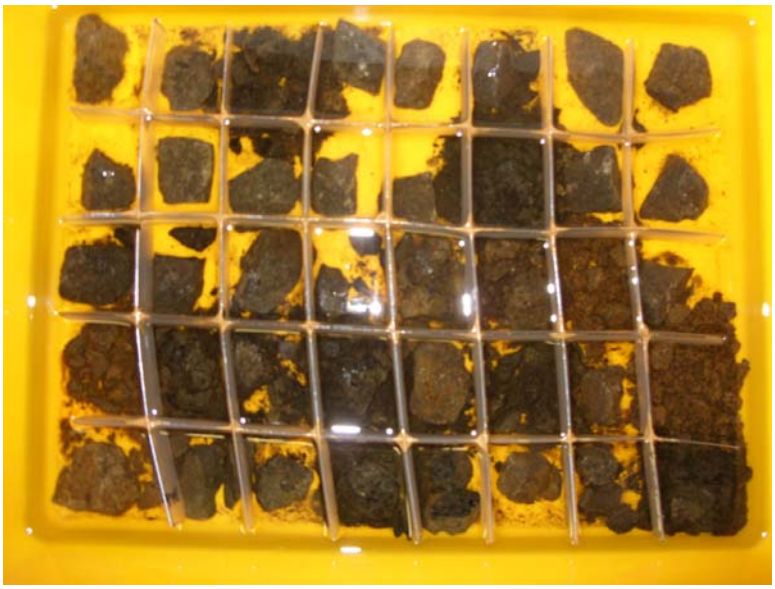

The ethylene glycol is not discarded at the end of the test but can be drained off the residual fragments, filtered and stored for future tests.